Onyx Wall

19 inch wall mount cabinets

Matt Black

Stl

✓ EIA-310-D Compliant

LOAD 60kg

✓ Australian Standards

- Suitable for housing networking equipment including patch panels, modems and routers.
- Wall mounted cabinets that are easy-to-install.
- Rear swing frame on selected models, allows maximum accessibility for maintenance.
- Load rating tested to AS62208-2006.
  - 60kg rating for 6RU and 9RU
  - 90kg rating for 12RU upwards
- Manufactured from 1.2mm SPCC rolled steel.
- Powdercoated textured Matt Black.

Comes standard with:

- Reversible swing frame
- Safety glass keylockable door
- Adjustable 19" mounting rails
- Fixed shelf (2 shelves on 18 & 24 RU models)
- Removable side panels with key locks coded to 92268

ORDERING GUIDE

		External Dimensions (mm)					Mounting Centres (mm)			
Part Number	RU	Height (A)	Width (B)	Depth (C)	Swing Frame (D)	Enclosure Depth	Height (E)	Width (F)	Fixed Shelf	Weight (kg)
ARWX6U450NF	6	370	600	450	–	450	220	450	1	18.0
ARWX6U450	6	370	600	550*	100	450	220	450	1	23.0
ARWX9U450	9	500	600	550*	100	450	350	450	1	27.0
ARWX12U450NF	12	635	600	450	–	450	485	450	1	24.0
ARWX12U450	12	635	600	550*	100	450	485	450	1	32.0
ARWX12U600	12	635	600	700*	100	600	485	450	1	38.0
ARWX18U450NF	18	905	600	450	–	450	755	450	2	30.0
ARWX18U450	18	905	600	550*	100	450	755	450	2	39.0
ARWX18U600	18	905	600	700*	100	600	755	450	2	45.0
ARWX24U450	24	1175	600	550*	100	450	1025	450	2	46.0
ARWX24U600	24	1175	600	700*	100	600	1025	450	2	52.0

* Includes depth of swing frame 100mm

Onyx Wall

19 inch wall mount cabinets

TECHNICAL DRAWINGS

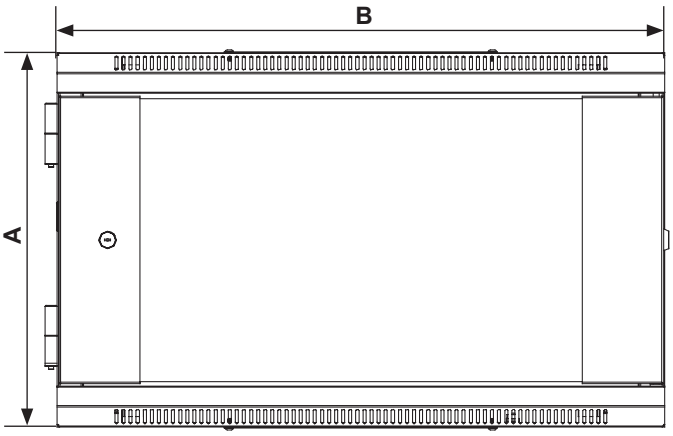

Front View

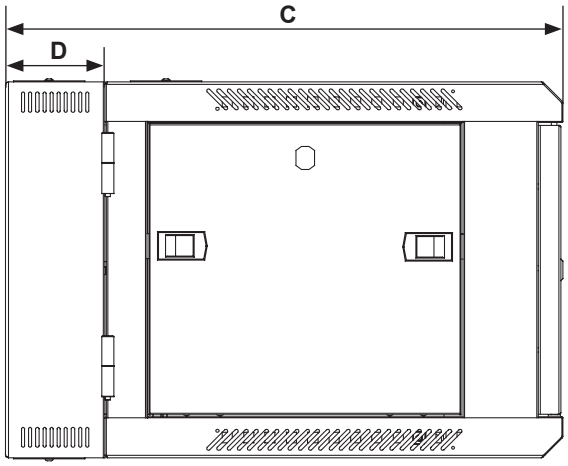

Side View

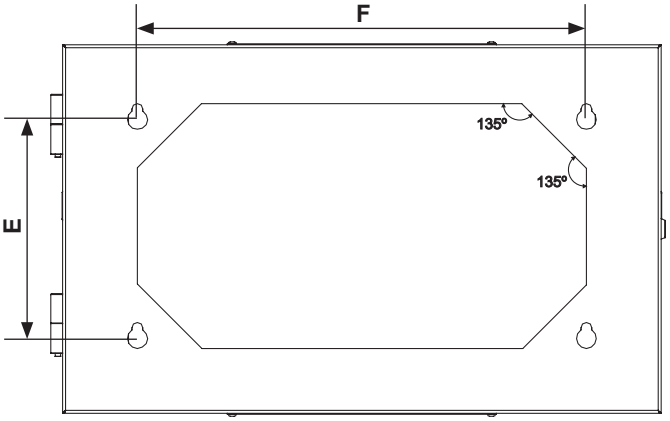

Rear View

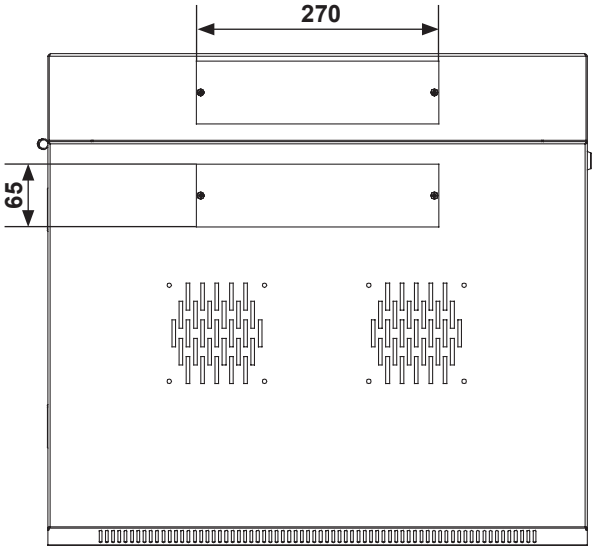

Top View

Accessories

Brush Strips - Ezibrush™

Keeps hot exhaust air away from cool intake air, extending the life of your equipment. These panels have a brush strip overhanging the 1RU size by an extra 5mm allowing simple management of air gaps when placed alongside other equipment.

Part Number	Description	RU	To suit cabinets & frames
ARBPB1U▲	Horizontal, 19" black, pack of 5 strips	1	All B&R Data ICT cabinets and frames

ARBPB1U

Brush Strips - Vertical

Designed to control airflow in the rack. They provide a barrier between the front of the frame and hot exhaust air at the rear, between the post and the side panel whilst also allowing cable access. Each strip attaches to the post and extends to the side panel of the cabinet. Sold as pairs (if ordering one (1) unit, it comes as two (2) strips).

For use with racks:

	To suit cabinets & frames		
Part Number	RU	Width (mm)	Product Range
ARPBS40U06▲	40	600	Ausrack Plus
ARPBS40U08▲	40	800	
ARPBS45U06▲	45	600	
ARPBS45U08▲	45	800	

ARPBS40U08

For use with cable zones:

	To suit cabinets & frames		
Part Number	RU	Width (mm)	Product Range
ARPBS40U100▲	40	100mm wide cable zones	Ausrack Plus
ARPBS40U106▲	40		
ARPBS40U200▲	40	200mm wide cable zones	
ARPBS40U206▲	40		
ARPBS45U100▲	45	100mm wide cable zones	
ARPBS45U106▲	45		
ARPBS45U200▲	45	200mm wide cable zones	
ARPBS45U206▲	45		

▲ Available on request

Accessories

Cable Management - Horizontal

Cable management is an efficient and tidy way to keep on top of high density cabling in a rack or cabinet.
Horizontal options can be incorporated into any B&R rack or cabinet.

Part Number	RU	Width (mm)	Depth (mm)	Description	To suit cabinets & frames
Horizontal Cable Management					
ARHCMF1U	1	480	125	Mounts on equipment rails 90mm finger length	All 19” racks
ARHCMF2U	2	480	125		
ARHCMF4U▲	4	480	125		
Horizontal Cable Management Extended Finger/ Cover Panel					
ARHCMFX1U▲	1			Extended finger 150mm finger length	All 19” racks
ARHCMFX2U▲	2				
ARHCMFX4U▲	4				
Horizontal Cable Management Rings					
ARCMHM1U120	1			Metal 120mm x 41.5mm ring	All 19” racks
ARCMHM2U120	2			Metal 120mm x 83mm ring	
ARPCMH1U	1			Plastic 55mm x 30mm ring	
Cable Management Hanger					
ARPCMP24	–			24 patch lead hanger, 597mm	Stand alone product wall mount

* Needs Cable Zone

ARHCMF1U

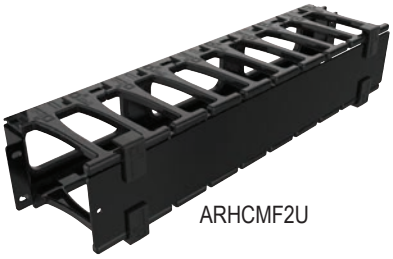

ARHCMF2U

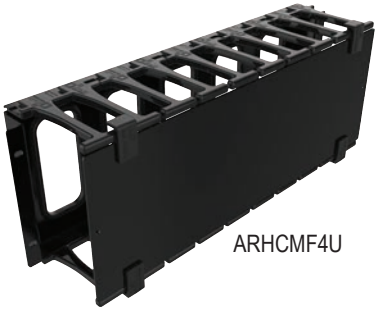

ARHCMF4U

▲ Available on request

Captive Plug Ring

- An easy-split mechanism allows plug ring to be retro-fitted without cutting the lead.
- Will suit most 10A or 15A single phase moulded SAA plugs.
- Will screw onto typical IP66 sockets similar to the 56 series.
- Clear design makes it easier to view plug for inspection.
- Manufactured from polycarbonate

Part Number	Finish	Sold as	Carton Qty
BRSPR1	Transparent	Single Plug	10

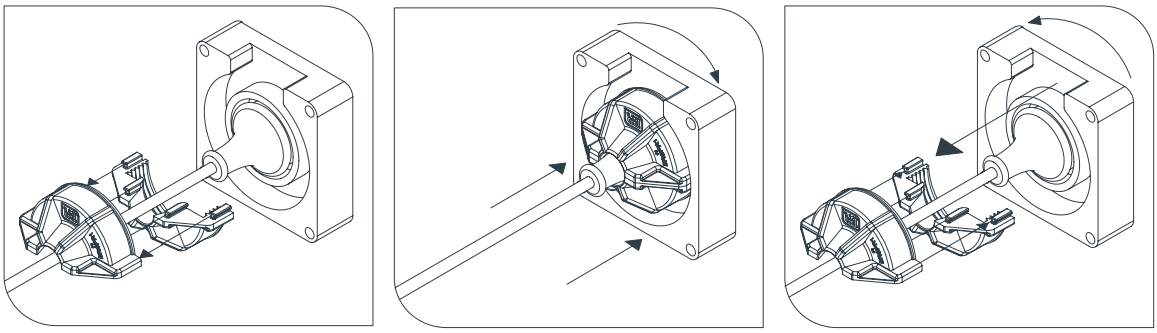

Copper Earth Bars

Installation of a copper earth bar into a data rack or cabinet will allow the active equipment to be grounded, providing protection from static electricity build up.

Part Number	Description	RU	Product Range
ARPEBH1U▲	Horizontal	1	All B&R Data ICT cabinets and frames

Fans

Both the two and four unit fan kits install into the roof or a bottom plinth. The two unit fan kit can also be fitted into the equipment rails. All fans are supplied with 2m flex and 10A SAA plug.

Part Number	No. of Fans	Description	RU	To Suit Enclosure
ARWX2F	2	Kit - 2 way roof fan with integrated thermostat	-	Wall onyX

*Fitting in roof and base only

All fans have a 10 Amp 3-pin plug on the power cable. Units with 2 fans have an airflow of 220cfm.

▲ Available on request

Accessories

Mesh Doors - Single

To maximise airflow all mesh doors consist of 63% or 60% open mesh and include a lockable wing knob and two point locking as standard (keyed to 92268).

		To suit cabinets & frames		
Part Number	Description	RU	Width (mm)	Product Range
ARDXM12U06	Single Mesh Steel Doors (60% open mesh)	12	600	onyX
ARDXM18U06▲		18	600	
ARDXM22U06▲		22	600	
ARDXM24U06		24	600	
ARDXM32U06▲		32	600	
ARDXM42U06▲		42	600	
ARDXM42U8		42	800	
ARDXM45U06▲		45	600	
ARDXM45U08▲		45	800	
ARDXM47U06▲		47	600	
ARDXM47U08▲		47	800	

Mesh Doors - Split

To maximise airflow all mesh doors consist of 63% or 60% open mesh and include a lockable wing knob and two point locking as standard (keyed to 92268).

		To suit cabinets & frames		
Part Number	Description	RU	Width (mm)	Product Range
ARDXDD42U06▲	Split Mesh Steel Doors (60% open mesh)	42	600	onyX
ARDXDD42U08▲		42	800	
ARDXDD45U06▲		45	600	
ARDXDD45U08▲		45	800	
ARDXDD47U06		47	600	
ARDXDD47U08▲		47	800	

ARDM

▲ Available on request

General Accessories

Part Number	Product	To suit enclosure
ARXSPL	Side panel lock kit, single	onyX
ARCN	Cage nuts, screws and washers Pack of 50	All B&R Data ICT products
ARSTUD20▲	Rack Studs, pack of 20	
ARSTUD100▲	Rack Studs, pack of 100	
ARWB1U	Light duty wall mount 19” brackets. Suitable when cabinet mounting is not practical and space is limited. One side is hinged to allow patch panels and equipment to be swung out for rear access.	1RU x 500mmW x 200mmD
ARWB2U▲		2RU x 500mmW x 200mmD
ARWB4U▲		4RU x 500mmW x 200mmD

ARWB1U &
ARWB2U

ARCN

ARSTUD100

Ausrack Power Rails & Intelligent PDU’s

ORDER GUIDE - STANDARD

Part Number	Orientation	RU	Description	Product Range
ARPRH61010	Horizontal	1	6 x 10A SAA Outlet 10A SAA Plug	All B&R Data ICT cabinets and frames
ARPRH61015		1	6 x 10A SAA Outlet 15A SAA Plug	
ARPRH101010		2	10 x 10A SAA Outlet 10A SAA Plug	
ARPRH101015		2	10 x 10A SAA Outlet 15A SAA Plug	

ORDER GUIDE - SURGE PROTECTION

Part Number	Orientation	RU	Description	Product Range
ARPRHS61010	Horizontal	1	6 x 10A SAA Outlet, 10A Captive Plug	All B&R Data ICT cabinets and frames
ARPRHS61015▲		1	6 x 10A SAA Outlet, 15A Captive Plug	

ARPRHS61010

ARPRH101010

▲ Available on request

Accessories

Shelves

Providing a stable platform for other miscellaneous gear, shelving mounts off the 19” rack rails. All shelves are vented to allow vertical airflow.

Part Number	Description	RU	Depth (mm)	Load Rating (kg)	Suit Cabinet Depth	Product Range
ARTF450	Telescopic, full extension	1	450	20	600mm deep	All B&R Data ICT cabinets and frames
ARTH450▲	Telescopic, half extension, locking	1	450	40	600mm deep	All B&R Data ICT cabinets and frames
ARC360	Cantilever	2	360	10	–	All B&R Data ICT cabinets and frames *excluding all ARIP <400mm deep
ARC210		2	210	10	–	All B&R Data ICT cabinets and frames
ARPCS150▲		2	150	10	–	
ARPCS250▲		2	250	10	–	
ARPCS350▲		2	350	10	–	
ARPCS450▲		2	450	10	–	
ARWX450CS		2	450	10	600	onyX
ARXKBC350	Keyboard shelf	1	350	10	600	
ARKBC▲	Keyboard pivot tray accessory*	2	–	–	–	All B&R Data ICT cabinets and frames

* Requires half extension telescopic shelf to mount.

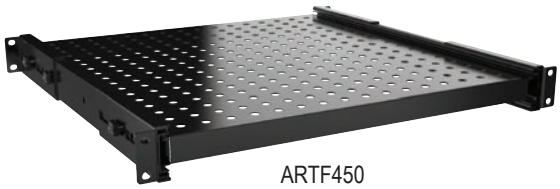

ARTF450

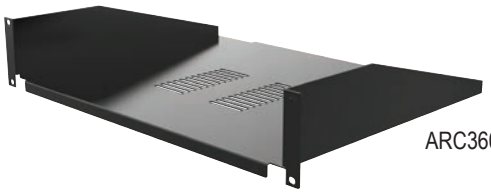

ARC360

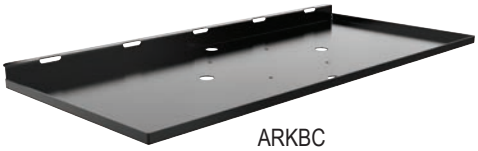

ARKBC

ARPCS250
shown from rear

ARPCS450

▲ Available on request

Shelves

Providing a stable platform for other miscellaneous gear, shelving mounts off the 19” rack rails. All shelves are vented to allow vertical airflow.

Part Number	Description	RU	Depth (mm)	Load Rating (kg)	Suit Cabinet Depth (mm)	Product Range
ARXFL350	Fixed, light duty	1	350	20	600	onyX
ARXFL550		1	550	20	800	
ARXFL710		1	710	20	1000	
ARWX450FS		1	270	20	450	
ARWX600FS▲		1	420	20	600	
ARPFL600		1	450	50	600	All B&R Data ICT cabinets and frames
ARPFH600	Fixed, heavy duty	1	450	160	600	All B&R Data ICT cabinets and frames

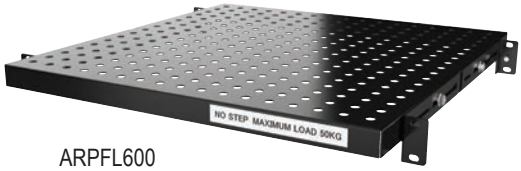

ARPFL600

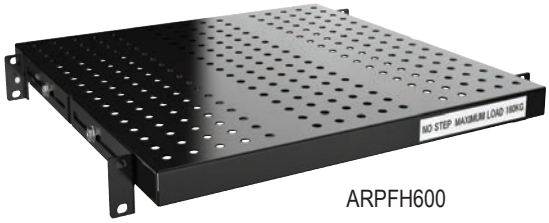

ARPFH600

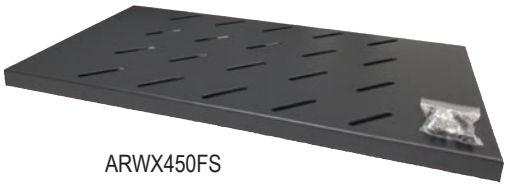
ARWX450FS

ARPFH600 - shows underside reinforcing for heavy duty load.

15-09-2026

▲ Available on request