Onyx Floor Server

19 inch light duty server cabinets

Matt Black

EIA-310-D Compliant

SSI Compliant

LOAD 1000kg

Australian Standards

- Robust, fully featured server rack designed for large data room applications with unrestricted airflow.
- Static load rating to 1000 kg – compliant with AS 62208:2006.
- Manufactured from SPCC cold-rolled steel.
- Powdercoated textured matt black finish.

Comes standard with:

- Frame with two removable side panels
- Mesh front door and split mesh rear doors
- Key-lockable swing handles (keyed to 92268) fitted to both front and rear doors
- Four full-height RU-marked, notched mounting rails
- Fully adjustable 19" front-mounted shelves:
  - 1 shelf (22RU)
  - 2 shelves (32RU)
  - 3 shelves (42RU & 45RU)
- Roof-mounted fan unit with thermostat:
  - 2-fan unit for cabinets ≤600 mm deep
  - 4-fan unit for 800 mm and 1000 mm deep cabinets
- 10-way Australian 3-pin horizontal power rail
- Adjustable feet and braked castor kit
- 20 cage nuts and screws with insertion/removal tool

800 mm wide cabinets only:

- Two full-height front-mounted vertical finger cable management systems with removable snap-on covers
- Two top-mounted side cable entry points

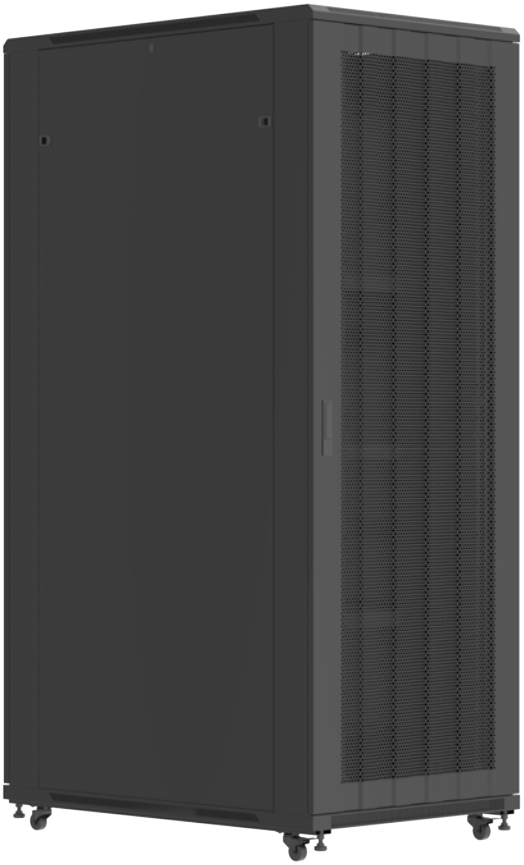

ORDERING GUIDE

		Dimensions (mm)				
Part Number	RU	Height (A)	Width (B)	Depth (C)	Total Height	Weight (kg)
ARSX60842U	42	1995	600	800	2065	105.0
ARSX61042U	42	1995	600	1000	2065	124.0
ARSX61242U	42	1995	600	1200	2065	139.0
ARSX80842U	42	1995	800	800	2065	150.0
ARSX81042U	42	1995	800	1000	2065	168.0
ARSX81242U	42	1995	800	1200	2065	183.0
ARSX60845U	45	2130	600	800	2200	115.0
ARSX61045U	45	2130	600	1000	2200	136.0
ARSX61245U	45	2130	600	1200	2200	151.0
ARSX80845U	45	2130	800	800	2200	163.0
ARSX81045U	45	2130	800	1000	2200	178.0
ARSX81145U	45	2130	800	1100	2200	185.0
ARSX81245U	45	2130	800	1200	2200	193.0

* Height does not include feet or castors

Onyx Floor Server

19 inch light duty server cabinets

TECHNICAL DRAWINGS

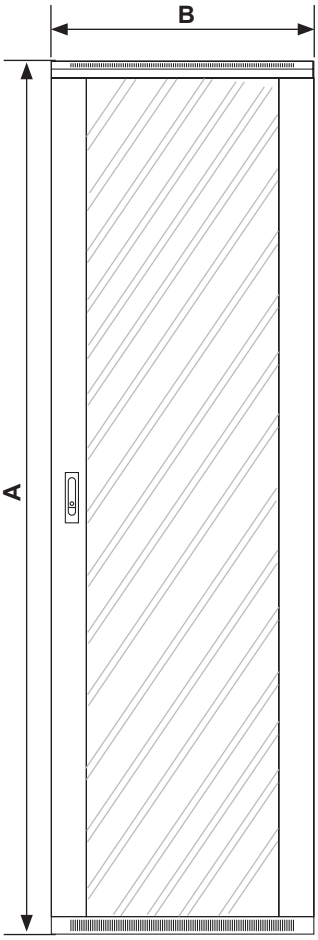

Front View

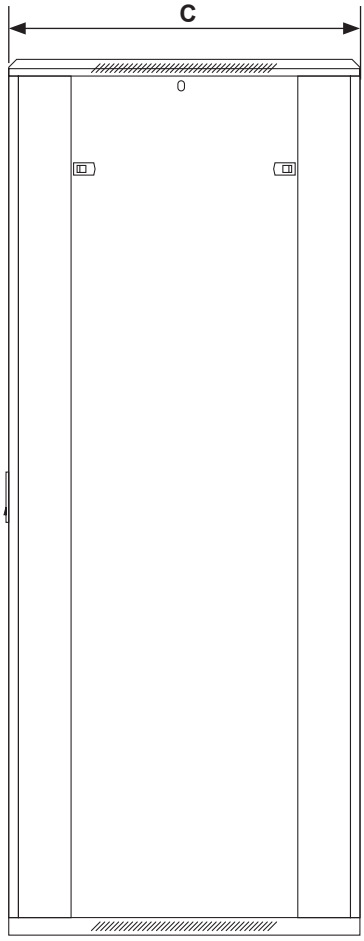

Side View

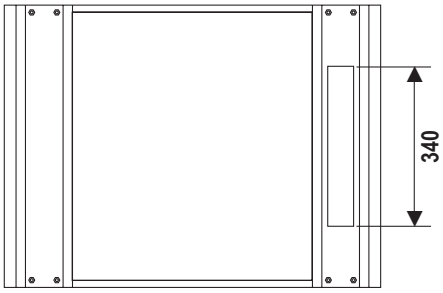

Top View

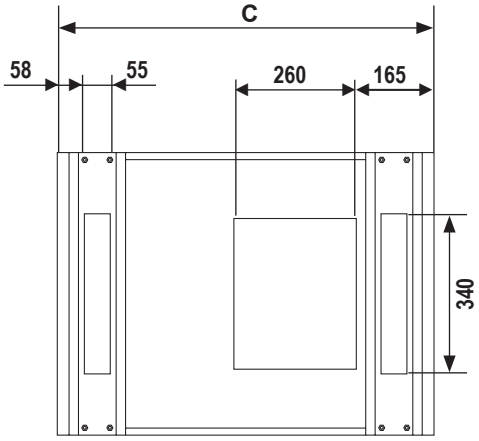

Bottom View

Grey lines represent mesh area of the door.

19” mounting rail setback is 110mm from front/rear of cabinet.

Accessories

Brush Strips - Ezibrush™

Keeps hot exhaust air away from cool intake air, extending the life of your equipment. These panels have a brush strip overhanging the 1RU size by an extra 5mm allowing simple management of air gaps when placed alongside other equipment.

Part Number	Description	RU	To suit cabinets & frames
ARBPB1U▲	Horizontal, 19" black, pack of 5 strips	1	All B&R Data ICT cabinets and frames

ARBPB1U

Brush Strips - Vertical

Designed to control airflow in the rack. They provide a barrier between the front of the frame and hot exhaust air at the rear, between the post and the side panel whilst also allowing cable access. Each strip attaches to the post and extends to the side panel of the cabinet. Sold as pairs (if ordering one (1) unit, it comes as two (2) strips).

For use with racks:

	To suit cabinets & frames		
Part Number	RU	Width (mm)	Product Range
ARPBS40U06▲	40	600	Ausrack Plus
ARPBS40U08▲	40	800	
ARPBS45U06▲	45	600	
ARPBS45U08▲	45	800	

ARPBS40U08

For use with cable zones:

	To suit cabinets & frames		
Part Number	RU	Width (mm)	Product Range
ARPBS40U100▲	40	100mm wide cable zones	Ausrack Plus
ARPBS40U106▲	40		
ARPBS40U200▲	40	200mm wide cable zones	
ARPBS40U206▲	40		
ARPBS45U100▲	45	100mm wide cable zones	
ARPBS45U106▲	45		
ARPBS45U200▲	45	200mm wide cable zones	
ARPBS45U206▲	45		

▲ Available on request

Accessories

Cable Management - Horizontal

Cable management is an efficient and tidy way to keep on top of high density cabling in a rack or cabinet.
Horizontal options can be incorporated into any B&R rack or cabinet.

Part Number	RU	Width (mm)	Depth (mm)	Description	To suit cabinets & frames
Horizontal Cable Management					
ARHCMF2U	2	480	125		All 19'' racks
Horizontal Cable Management Extended Finger/ Cover Panel					
ARHCMFX1U▲	1			Extended finger 150mm finger length	All 19" racks
ARHCMFX2U▲	2				
ARHCMFX4U▲	4				
Horizontal Cable Management Rings					
ARCMHM1U120	1			Metal 120mm x 41.5mm ring	All 19" racks
ARCMHM2U120	2			Metal 120mm x 83mm ring	
ARPCMH1U	1			Plastic 55mm x 30mm ring	
Cable Management Hanger					
ARPCMP24	–			24 patch lead hanger, 597mm	Stand alone product wall mount

* Needs Cable Zone

ARHCMF1U

ARHCMF2U

ARHCMF4U

Captive Plug Ring

- An easy-split mechanism allows plug ring to be retro-fitted without cutting the lead.
- Will suit most 10A or 15A single phase moulded SAA plugs.
- Will screw onto typical IP66 sockets similar to the 56 series.
- Clear design makes it easier to view plug for inspection.
- Manufactured from polycarbonate

Part Number	Finish	Sold as	Carton Qty
BRSPR1	Transparent	Single Plug	10

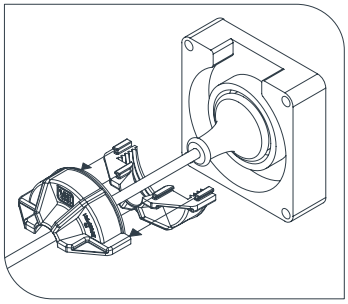

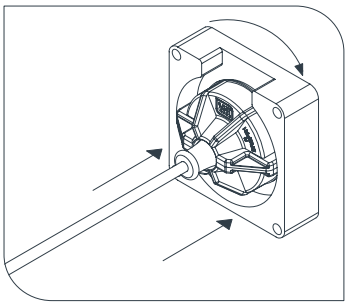

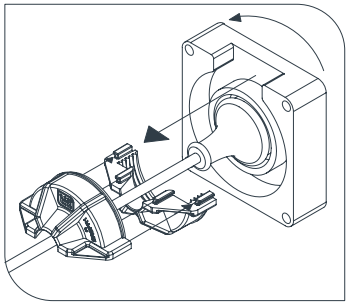

▲ Available on request

Captive Plug Ring

- An easy-split mechanism allows plug ring to be retro-fitted without cutting the lead.
- Will suit most 10A or 15A single phase moulded SAA plugs.
- Will screw onto typical IP66 sockets similar to the 56 series.
- Clear design makes it easier to view plug for inspection.
- Manufactured from polycarbonate

Part Number	Finish	Sold as	Carton Qty
BRSPR1	Transparent	Single Plug	10

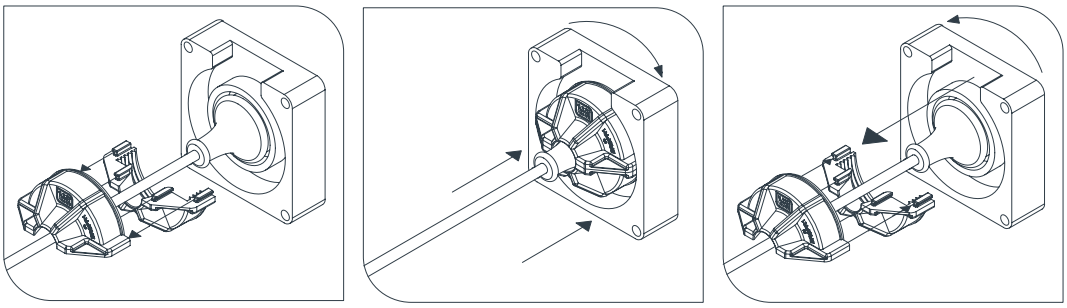

Copper Earth Bars

Installation of a copper earth bar into a data rack or cabinet will allow the active equipment to be grounded, providing protection from static electricity build up.

Part Number	Description	RU	Product Range
ARPEBH1U▲	Horizontal	1	All B&R Data ICT cabinets and frames

Mesh Doors - Single

To maximise airflow all mesh doors consist of 63% or 60% open mesh and include a lockable wing knob and two point locking as standard (keyed to 92268).

		To suit cabinets & frames		
Part Number	Description	RU	Width (mm)	Product Range
ARDXM12U06	Single Mesh Steel Doors (60% open mesh)	12	600	onyX
ARDXM18U06▲		18	600	
ARDXM22U06▲		22	600	
ARDXM24U06		24	600	
ARDXM32U06▲		32	600	
ARDXM42U06▲		42	600	
ARDXM42U8		42	800	
ARDXM45U06▲		45	600	
ARDXM45U08▲		45	800	
ARDXM47U06▲		47	600	
ARDXM47U08▲		47	800	

▲ Available on request

Accessories

Fans

Both the two and four unit fan kits install into the roof or a bottom plinth. The two unit fan kit can also be fitted into the equipment rails. All fans are supplied with 2m flex and 10A SAA plug.

Part Number	No. of Fans	Description	RU	To Suit Enclosure
ARXAF2▲	2	Kit - 2 way roof fan with integrated thermostat	-	Floor onyX
ARXAF4U80*▲	4	Kit - 800 deep 2 way roof fan with integrated thermostat	-	

*Fitting in roof and base only

All fans have a 10 Amp 3-pin plug on the power cable.

Units with 2 fans have an airflow of 220cfm. Units with 4 fans have an airflow of 440cfm.

General Accessories

Part Number	Product	To suit enclosure
ARFXBK	Baying kit, pack of 4 brackets	onyX Floor onyX Floor Server
SK3	Door key, keyed to 92268	onyX Floor
ARXSPL	Side panel lock kit, single	onyX
ARCN	Cage nuts, screws and washers Pack of 50	All B&R Data ICT products
ARSTUD20▲	Rack Studs, pack of 20	
ARSTUD100▲	Rack Studs, pack of 100	
ARWB1U	Light duty wall mount 19” brackets. Suitable when cabinet mounting is not practical and space is limited. One side is hinged to allow patch panels and equipment to be swung out for rear access.	1RU x 500mmW x 200mmD
ARWB2U▲		2RU x 500mmW x 200mmD
ARWB4U▲		4RU x 500mmW x 200mmD

ARWB1U &
ARWB2U

ARCN

ARSTUD100

▲ Available on request

Accessories

ARPRK

ARPSSK

ARCH

ARPFK

ALJK

ARPBK

Plinths

Provide a fixed base for the cabinet and also a working space underneath the cabinet for the cables.

Part Number	Height (mm)	Width (mm)	Depth (mm)	To suit cabinets & frames
ARXP610▲	100	600	1000	onyX Floor & onyX Floor Server
ARXP62▲	100	600	1200	
ARXP66▲	100	600	600	
ARXP68▲	100	600	800	
ARXP69▲	100	600	960	
ARXP810▲	100	800	1000	
ARXP82▲	100	800	1200	
ARXP88▲	100	800	800	

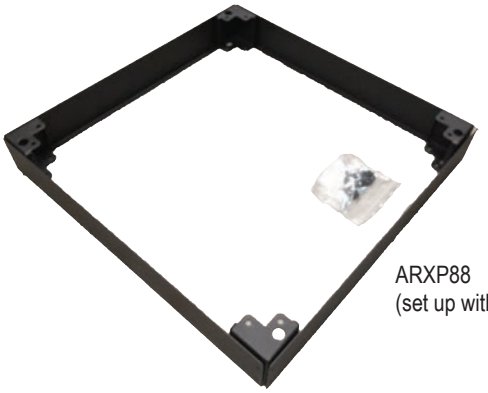

ARXP88
(set up without fixings)

ARXP88
(parts and fixings)

▲ Available on request

Ausrack Power Rails & Intelligent PDU's

ORDER GUIDE - STANDARD

Part Number	Orientation	RU	Description	Product Range
ARPRH61010	Horizontal	1	6 x 10A SAA Outlet 10A SAA Plug	All B&R Data ICT cabinets and frames
ARPRH61015		1	6 x 10A SAA Outlet 15A SAA Plug	
ARPRH101010		2	10 x 10A SAA Outlet 10A SAA Plug	
ARPRH101015		2	10 x 10A SAA Outlet 15A SAA Plug	

ARPRH61015

ARPRH101010

ORDER GUIDE - SURGE PROTECTION

Part Number	Orientation	RU	Description	Product Range
ARPRHS61010	Horizontal	1	6 x 10A SAA Outlet, 10A Captive Plug	All B&R Data ICT cabinets and frames
ARPRHS61015▲		1	6 x 10A SAA Outlet, 15A Captive Plug	

ARPRHS61010

▲ Available on request

Shelves

Providing a stable platform for other miscellaneous gear, shelving mounts off the 19” rack rails. All shelves are vented to allow vertical airflow.

Part Number	Description	RU	Depth (mm)	Load Rating (kg)	Suit Cabinet Depth	Product Range
ARTF450	Telescopic, full extension	1	450	20	600mm deep	All B&R Data ICT cabinets and frames
ARTF750		1	750	20	900mm deep	onyX Floor, onyX Server, Ausrack Plus, CQr Guardian, TxD, Field FE & iLINQ
ARTF950▲		1	950	20	1100mm deep	
ARTH450▲	Telescopic, half extension, locking	1	450	40	600mm deep	All B&R Data ICT cabinets and frames
ARTH750▲		1	750	40	900mm deep	onyX Floor, onyX Server, Ausrack Plus, CQr Guardian, TxD, Field FE & iLINQ
ARTH950▲		1	950	40	1100mm deep	onyX Floor, onyX Server, Ausrack Plus, CQr Guardian, TxD & iLINQ
ARC360	Cantilever	2	360	10	–	All B&R Data ICT cabinets and frames *excluding all ARIP <400mm deep
ARC210		2	210	10	–	All B&R Data ICT cabinets and frames
ARPCS150▲		2	150	10	–	
ARPCS250▲		2	250	10	–	
ARPCS350▲		2	350	10	–	
ARPCS450▲		2	450	10	–	
ARWX450CS		2	450	10	–	onyX
ARXKBC350	Keyboard shelf	1	350	10	600	
ARKBC▲	Keyboard pivot tray accessory*	2	–	–	–	All B&R Data ICT cabinets and frames

* Requires half extension telescopic shelf to mount.

ARTF450

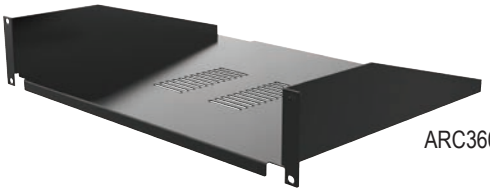

ARC360

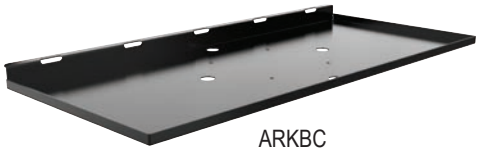

ARKBC

ARPCS250
shown from rear

ARPCS450

▲ Available on request

Accessories

Shelves

Providing a stable platform for other miscellaneous gear, shelving mounts off the 19” rack rails. All shelves are vented to allow vertical airflow.

Part Number	Description	RU	Depth (mm)	Load Rating (kg)	Suit Cabinet Depth (mm)	Product Range
ARXFL350	Fixed, light duty	1	350	20	600	onyX
ARXFL550		1	550	20	800	
ARXFL710		1	710	20	1000	
ARWX450FS		1	450	20	450	
ARWX600FS▲		1	600	20	600	
ARPFL600		1	450	50	600	All B&R Data ICT cabinets and frames
ARPFL800		1	650	50	800	onyX Floor, onyX Server, Ausrack Plus, CQr, TxD, Field FE & iLINQ
ARPFL900		1	750	50	900	onyX Floor, onyX Server, Ausrack Plus, CQr, TxD & iLINQ
ARPFL1000		1	850	50	1000	
ARPFL1100		1	950	50	1100	
ARPFL1200		1	1050	50	1200	
ARPFH600	Fixed, heavy duty	1	450	160	600	All B&R Data ICT cabinets and frames
ARPFH800▲		1	650	160	800	onyX Floor, onyX Server, Ausrack Plus, CQr, TxD, Field FE & iLINQ
ARPFH900▲		1	750	160	900	onyX Floor, onyX Server, Ausrack Plus, CQr, TxD & iLINQ
ARPFH1000▲		1	850	160	1000	
ARPFH1100		1	950	160	1100	
ARPFH1200		1	1050	160	1200	

ARPFL600

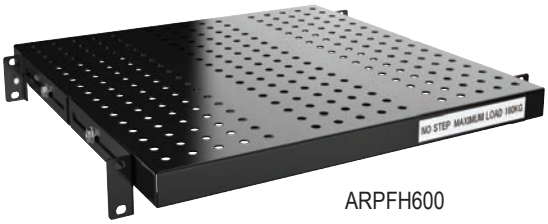

ARPFH600

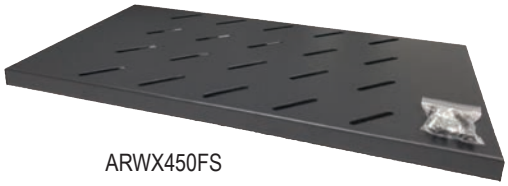
ARWX450FS

ARPFH600 - shows underside reinforcing for heavy duty load.

10-09-2025

▲ Available on request