B&R ENCLOSURES

INDUSTRIAL CATALOGUE

Steel, stainless steel and non-metallic enclosures, switchboard systems, climate control and accessories for mining and industrial applications.

brenclosures.com.au
1300 362 567

AUSTRALIA

Sales
T: 1300 Enclosures (1300 362 567)
E: sales@brenclosures.com.au
brenclosures.com.au

QUEENSLAND
Brisbane Manufacturing, Sales & Warehouse
51 Stradbroke Street
Heathwood QLD 4110
T: +61 7 3714 1111
E: salesqld@brenclosures.com.au

NORTH QUEENSLAND
Townsville Sales & Warehouse
Unit 4 / 780 Ingham Road
Mount Louisa QLD 4814
T: +61 7 4727 1900
E: salestvl@brenclosures.com.au

NEW SOUTH WALES
NSW & ACT Sales & Warehouse
7 Metters Place Wetherill Park
NSW 2164
T: +61 2 9915 9555
E: salesnsw@brenclosures.com.au

NEWCASTLE Distribution
109-111 Broadmeadow Road
Broadmeadow NSW 2292
T: +61 2 4961 4433

VICTORIA & TASMANIA
VIC & TAS Sales & Warehouse
Unit 1, 60-62 Abbott Road
Hallam VIC 3803
T: +61 3 9552 0552
E: salesvic@brenclosures.com.au

SOUTH AUSTRALIA
SA & NT Manufacturing, Sales & Warehouse
505 Grand Junction Road
Wingfield SA 5013
T: +61 8 8417 6222
E: salessa@brenclosures.com.au

NORTHERN TERRITORY Distribution
Girramaa Pty Ltd
10 Swan Cres.
Winnellie Darwin, 0820
T: +61 8 7936 8607

WESTERN AUSTRALIA
WA Sales Office & Warehouse
6 Montgomery Way
Malaga WA 6090
T: +61 8 6310 4777
E: saleswa@brenclosures.com.au

NEW ZEALAND

Sales
B&R Enclosures Limited
T: 0800 Enclosures (0800 362 567)
E: sales@brenclosures.co.nz
brenclosures.co.nz

AUCKLAND Distribution
Unit 6/103 Cryers Road
East Tamaki Auckland NZ 2013
T: +64 9 265 2097
E: sales@brenclosures.co.nz

CHINA

Sales
B&R Enclosures (Suzhou) Co. Ltd
E: sales@brenclosures.com.cn
brenclosures.cn

SUZHOU
Suzhou Sales Office & Manufacturing
Building 45 Chuangtou Industrial Zone
SIP, Suzhou 215122
PEOPLE'S REPUBLIC OF CHINA
T: +86 512 8718 2139
E: sales@brenclosures.com.cn

MIDDLE EAST

Sales
B&R Gulf
M: +966 503 496 592
T: +966 381 2869 1 or +966 5034 9659 2
E: sales@brgulf.com.sa
brgulf.com

DAMMAM Manufacturing, Sales & Warehouse
B&R Gulf
Factory No. 12, Modon Buildings,
King Salman Road, Industrial Area 3,
Dammam, Saudi Arabia
M: +966 503 496 592
T: +966 381 2869 1 or +966 5034 9659 2
E: sales@brgulf.com.sa
brgulf.com

DISCLAIMER

This brochure has been prepared specifically for customers of the publisher and as a general reference only. B&R Enclosures Pty Ltd engages in a policy of continuous development and improvement of its products and reserves the right to alter, add and/or delete specifications of any products or equipment and change of manufacturing location without notice and without incurring liability. The publisher and any party associated with the production of this catalogue do not accept any responsibility or liability whatsoever (to the extent permitted by law) for any inaccuracy, error, misinformation or misleading statements, whether negligently caused or otherwise, contained in this publication. This publication is protected by copyright and may not be reproduced or copied (using any method of reproduction or copying), sold, transmitted, circulated or otherwise forwarded to third parties, in whole or part, without prior written consent of the author. All registered trademarks and product names appearing herein are the property of the respective owners.

TABLE OF CONTENTS

About B&R Enclosures 4
Our Locations & Customers 5
Our Capabilities & Supply Strategies 6
Project Services 7
The B&R Engagement Loop & Paint Colours 8
Accreditations & Compliance 9

GENERAL PURPOSE ENCLOSURES
Polynova PJ 10
Polynova PS 12
Polynova PC 14
Polynova PM 16
Polynova PN 18
Polynova PU 20
Polynova PD 22
Forte FR 24
Universal NI Zinc Coated Steel 26
Universal NI 316 Stainless Steel 28
Universal NI Zinc Coated Steel Viewing Window 30
Universal NI 316 Stainless Steel Viewing Window 32
Locks 34
Project Profile - BHP Olympic Dam 35
Connector TE Zinc Coated Steel 36
Connector TE 316 Stainless Steel 38
Connector TEMF 40
Control Stations 316 Stainless Steel 42
Universal DD Zinc Coated Steel 44
Universal DD 316 Stainless Steel 46

MINING ENCLOSURES
Incline SR 48
Hedland PH 50
Finucane FI 52
Miner ME 54
Bowen Series 56
Bowen Series with Sunshades 58
Pilbara SP Zinc Coated Steel 60
Pilbara SP 16 Stainless Steel 62
Pilbara SP with Sunshades Zinc Coated Steel 64
Pilbara SP with Sunshades 316 Stainless Steel 66
Lambert LB 68

SWITCHBOARDS AND POWER DISTRIBUTION ENCLOSURES
Monarch SMB & CT 70
Signature SE 72
Locks 74
Monarch IP Zinc Coated Steel 76
Monarch IP 316 Stainless Steel 80
Monarch IP Aluminium 84
Monarch IP Accessories 88
Monarch IP Locks 99
Enclosure LED Lighting 100
Power Case 102
Field FC 104
Queensland ITS Enclosure 108

CLIMATE CONTROL
DEK Series 111
NOX Series 112
BLU-BIT Series 114
MIX Series 115
FAN & FILTER 117
DLK SERIES 119
ANTI CONDENSATION HEATERS 121
WID SERIES 122
ACCESSORIES 124

About B&R Enclosures

Since 1955, B&R Enclosures has built a reputation for excellence in design and production, culminating in our position as one of Australia's largest enclosure manufacturers and electrical equipment integration specialists.

As an independent, 100% Australian family owned and operated business, we champion the virtues of quality, innovation, service and value. The emphasis on these aspects has sustained B&R's growth leading to Australian manufacturing and distribution facilities in Brisbane, Adelaide and Sydney and internationally in China and Saudi Arabia.

B&R's knowledge, precision, quality and unwavering commitment to creating repeatable solutions for our clients supports our position as preferred manufacturer for many private, government and commercial projects in some of Australia's harshest environments.

The business encompasses four divisions: Industrial, Data ICT, Hazardous Areas and Residential Commercial. Each division focuses on the unique needs of different market segments.

B&R regularly works with partners to provide integrated solutions for major infrastructure and mining projects. These include 'plug and play' switchboard solutions for Rio Tinto's Oyu Tolgoi mine, control stations for Ichthys on-shore LNG processing plant and Australia's NBN Rollout. Ongoing relationships and collaboration are results of our ability to articulate the customer's problem and combine previous experience and knowledge with compliance to local standards.

Electrical integration involves the installation, commissioning and testing of 3rd party components and we are adept at managing the acquisition and storage of technical components through a global supply chain that is structured, customised, agile, repeatable and results-based. Project management and execution is effectively managed at B&R by the co-location of design, supervision, supply coordination and quality control along with manufacturing. Our incorporation of Industry 4.0 delivers real-time data to our project management teams, built around the requirements of individual projects.

Extensive investment in research and development includes an environmental testing facility focussing on climate control to support cooling solutions for equipment exposed to high ambient temperatures and solar radiation.

When utilised as designed, B&R's enclosures are built to out-perform against expectations.

Contact us today to find out how B&R can deliver reliable and trusted outcomes for your project.

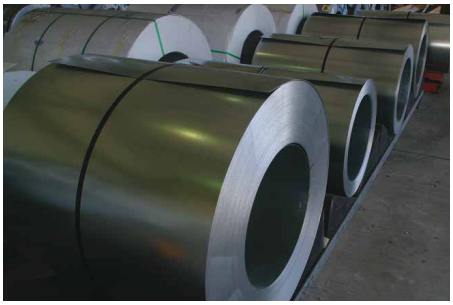

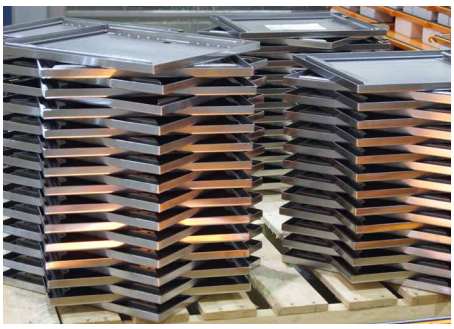

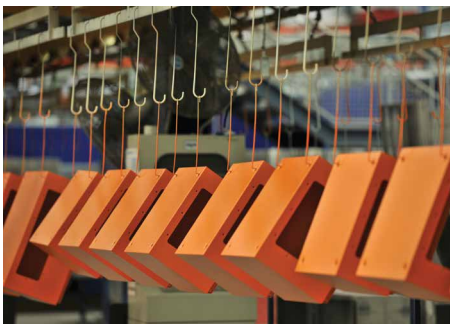

Our Locations

B&R Enclosures have purpose-built manufacturing facilities in three locations across Australia, as well as strategic locations in the Gulf and China.

Australia

Brisbane (QLD)
Global head office, manufacturing, sales and warehousing

Sydney, NSW
Hazardous manufacturing, sales and warehousing

Adelaide, SA
Manufacturing, sales and warehousing

Townsville (QLD), Newcastle (NSW), Melbourne (VIC), Perth (WA)
Sales and warehousing

New Zealand

Auckland
Sales and warehousing

Saudi Arabia

Dammam
Hazardous manufacturing, sales and warehousing

China

Suzhou
Manufacturing, sales and warehousing

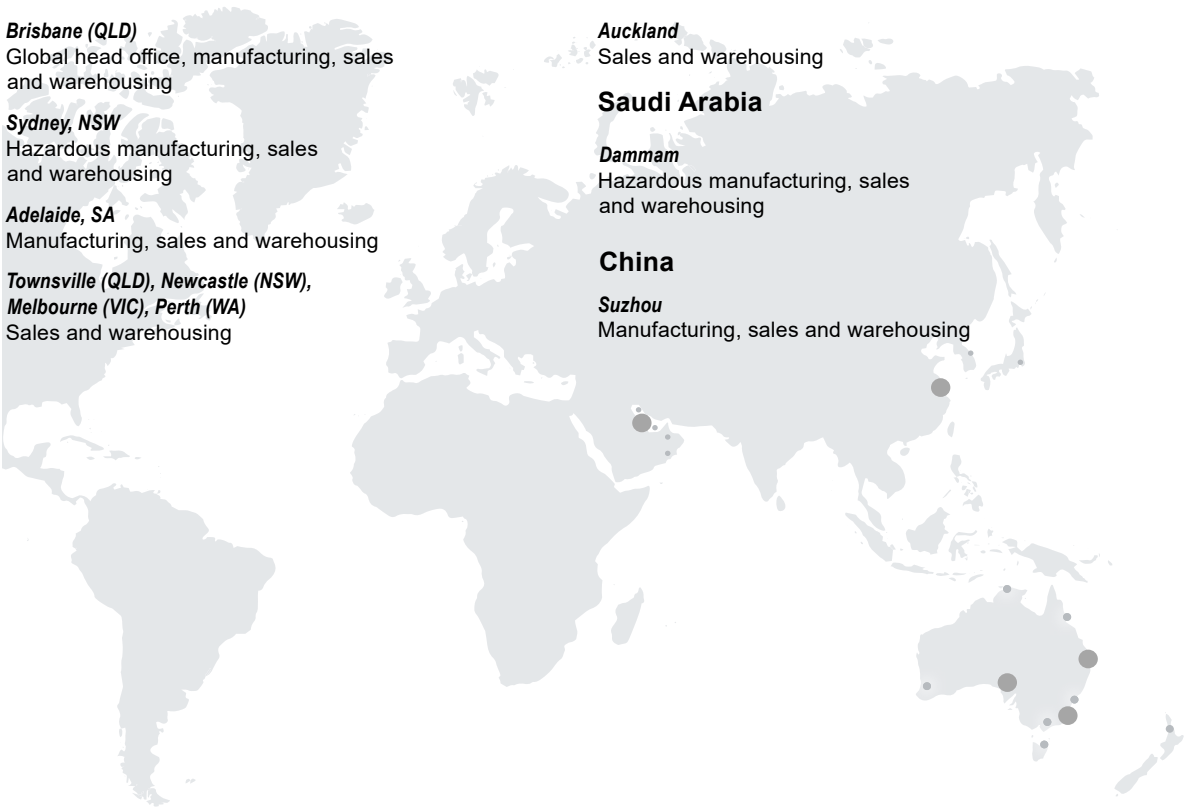

OUR CUSTOMERS

Our Capabilities

Over the years as the company has grown, we have invested significantly in machinery, technology and testing to be able to provide capabilities which our customers benefit from in every order they place. Our current capabilities include:

- Purpose-built Australian facilities in Brisbane (18,000m^2), Adelaide (4,000m^2) and Sydney (1,874^2), providing local labour and logistics
- Complete in-house design and engineering services to assist with creating custom solutions
- End-to-end manufacturing, from coiled steel raw material to commissioning the end product, we provide efficiency and complete quality control
- Variety of substrates and high quality finishes including stainless steel, powder coated and zinc to suit even the most demanding applications
- Modern machinery for any design to be formed and fabricated including automated sheet metal panel benders, punching and shearing centres, electrical equipment integration lines, press brakes, powder coat lines, fabrication cells and assembly lines
- Fully documented process available with full configuration management to support a detailed documentation experience
- Complete project management including supply chain, warehousing and logistics
- In-house and external testing for hazardous area electrical equipment and impact, IP, type testing, static load, seismic, wind load, salt spray, line inspection, shock, vibration, 2000A high current switchboard temperature rise type testing, EMC and MIL-STD
- Continuous improvement with our environmental testing facility for ongoing research and development
- Existing supply agreements with leading OEMs and major raw products distributors supporting loyal and valued relationships climate control and cooling solutions

OUR SUPPLY STRATEGIES

Made to Stock

These products are available ex stock from all our sales & warehousing branches. Contact your local sales representative to discuss requirements.

Assembled-to-Order

These products are assembled to order upon receipt of a customer order. All components required to build an ATO item cannot be sold separately and must form part of a kit. Standard lead time is 4-6 weeks from date of order.

Made to Order

These products are manufactured according to a customer's specification. They are marked in our catalogues as "▲ Available on request" and have a standard lead time of 2-3 weeks.

Engineered-to-Order

These products are a custom designed product that is 100% fit-for-purpose, delivered on-site and ready for installation. Our design & engineering team can customise an enclosure to suit the application requirements. Contact us for more information.

Customisable Project Services

Collaboration

- Convert customer requirements to product build specifications
- Work to customer delivery schedule
- Initiate procurement or consignment of stock allocations
- Supply of equipment configuration

Complete Project Management

- One point of contact
- Responsive communication channels
- DIFOTIS - Delivered In Full On Time In Specification
- Accountability for the delivery of our commitment to customers

Electrical & Equipment Integration

- Wiring and equipment installed to exact requirements
- Management of free issue, consigned and/or B&R sourced components and equipment
- Stock reporting and job allocation

Testing & Reporting To Customer Specifications

- Digital reports of product testing and acceptance
- Serialised codes to customer requirements, digital signature, component traceability and unique identifiers
- Real time quality assurance authorisation, approval and confirmation

Customer Specific Logistics

- Storage and warehouse management
- Site delivery logistics
- Option for removal of product packaging after installation

The B&R Engagement Loop
(Project Services)

In order to engage successfully with our project customer's, B&R representatives follow a structured service plan.

We take our responsibilities seriously and take pride in fostering collaborative, open relationships with our project customers. Our approach ensures a comprehensive understanding of each project's unique needs, allowing us to deliver tailored solutions that meet diverse applications and technical specifications.

1. Our process begins with **INVESTIGATION.** Before reaching out to a customer or responding to an enquiry, we conduct thorough research into the customer, their project, and any relevant stakeholders.
2. The next step is **UNDERSTANDING**. We engage in detailed discussions with the customer to fully grasp their current challenges and future project goals. These conversations help us identify how our product solutions can address their specific needs.
3. With this valuable insight, we move to the third action: **SCOPING.** We collaborate with our in-house design, engineering, and estimating teams to assess the project requirements, prepare quotes, and create any necessary drawings.
4. Once we have developed a tailored solution, we address any potential variations and proceed to the fourth action: **AGREE**. Once all aspects are finalised and signed off, we move forward with manufacturing and equipment integration.
5. The fifth action is **DELIVERY.** We ensure that the finished product is shipped to the site in accordance with agreed timelines.
6. Finally, to continuously improve our service, we conduct an **EVALUATION.** We reflect on the project and, depending on its size and scope, seek customer feedback to confirm our performance and identify areas for improvement.

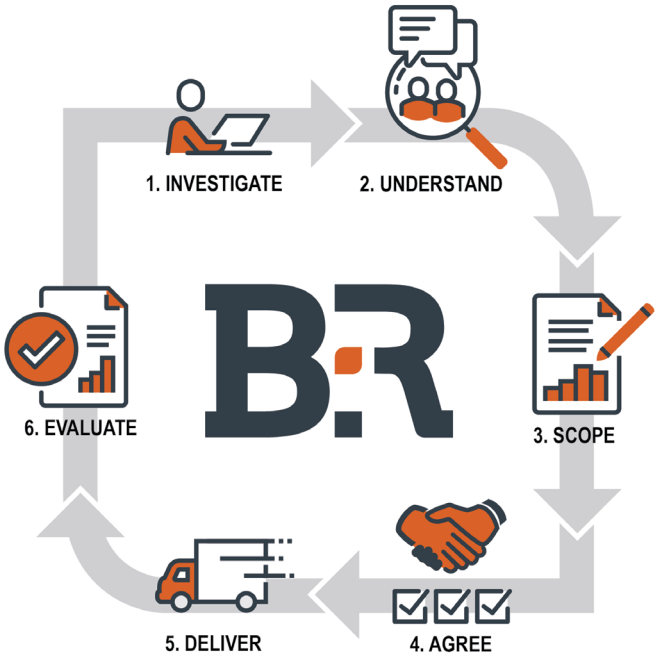

Paint Colours

We offer a range of standard powdercoat colours on all of our enclosure products. These colours are based on industry standards and allow us to offer our customers a range of products that are easily identifiable in multiple applications. Colour changes to standard product is an optional extra and other colours are available on request.

Light Grey - Ripple RAL7035

Pebble Grey - Ripple RAL7032

Orange - Ripple or Gloss X-15

Storm Grey - Ripple N42

French Blue - Ripple B21

Sahara Ebony Black - Fine texture

Smoke Blue - Ripple or Gloss T33

Pearl White - Ripple or Gloss *

Signal Red - Ripple

* Pearl White Gloss is used for internal components only. Pearl White Ripple can be used on enclosure exterior.

Accreditations & Compliance

At B&R, quality and value are just the beginning. We strive to deliver quality products developed and manufactured by a team dedicated to excellence, backed by standards, approvals and industry accreditations.

Certified System
Quality
ISO 9001
SAI GLOBAL

ISO 9001:2015

Every B&R facility undergoes external audits to ensure compliance with strict ISO9001 standards. Our products are rigorously inspected at the end of the production line to guarantee they meet the demands of their intended environment and application.

Certified System
Environment
ISO 14001
SAI GLOBAL

ISO 14001:2015

Sets out the criteria for an environmental management system. It maps out a framework that a company or organisation can follow to set up an effective environmental management system.

Certified System
OHS
ISO 45001
SAI GLOBAL

ISO 45001:2018

An externally audited Occupational Health and Safety Management System.

RoHS

RoHS

The RoHS directive aims to restrict certain dangerous substances commonly used in electronic and electronic equipment.

ASSDA
Australian Stainless Steel Development Assoc.

ASSDA

The Australian Stainless Steel Development Association provides comprehensive technical information on stainless steel. This includes information for users, equipment manufacturers and stainless steel suppliers.

Polynova PJ

Adaptable Boxes

RAL7035 NON-MET IP 55 IK 08

- Suitable for power distribution, junction and marshalling, process control and automation.
- Adaptable thermoplastic enclosures designed to house terminations and electrical components in individual boxes or assembled into a suited configuration.
- Capable of withstanding temperatures -25ºC to 90ºC.
- Conformity, Approvals:
  - UL94, V1 rating
  - IEC695-2-1: 960º Glow Wire Test
  - Halogen free (LSZH)
- Manufactured from UV stabilised polycarbonate.
- Light Grey RAL7035.

Comes standard with:

- Stainless steel cover screws

ORDERING GUIDE

Part Number		Dimensions (mm)							
		External				Internal	Mounting Centres		
Opaque	Transparent	Height (A)	Width (B)	Depth (C)	Cover Depth (D)	Usable Depth (E)	Height (F)	Width (G)	Weight (kg)
PJ110706	PJ110706T	110	75	65	15	53	75	40	0.1
PJ111106	–	110	110	65	15	53	75	75	0.2
PJ151107	PJ151107T	150	110	75	15	62	115	75	0.2
PJ151507	PJ151507T	150	150	75	15	62	115	115	0.3
PJ221507	PJ221507T	220	150	75	15	62	185	115	0.4
PJ302207	PJ302207T	300	220	75	15	62	265	185	0.7
PJ180908*	–	180	90	85	19	72	140	60	0.3
PJ151110	PJ151110T	150	110	100	40	87	115	75	0.3
PJ151510	PJ151510T	150	150	100	40	87	115	115	0.4
PJ221510	PJ221510T	220	150	100	40	87	185	115	0.4
PJ302210	PJ302210T	300	220	100	40	87	265	185	0.8
PJ111111	PJ111111T ^	110	110	112	62	100	75	75	0.2
PJ151115	PJ151115T ^	150	110	150	90	137	115	75	0.3
PJ151515	PJ151515T	150	150	150	90	137	115	115	0.4
PJ221515	PJ221515T	220	150	150	90	137	185	115	0.5
PJ302215	PJ302215T	300	220	150	90	137	265	185	0.9

* PJ180908 is rated to IP66

^ Run out stock

ACCESSORIES

Product	Description	Part Number	Dimensions (mm) Height	Dimensions (mm) Width	PJ110706(/T)	PJ111106	PJ151107(/T)	PJ151507(/T)	PJ221507(/T)	PJ302207(/T)	PJ180908	PJ151110(/T)	PJ151510(/T)	PJ221510(/T)	PJ302210(/T)	PJ111111(/T)	PJ151115(/T)	PJ151515(/T)	PJ221515(/T)	PJ302215(/T)
Mounting pan	Metal	PJ1111/M	88	88		•										•				
		PJ1511/M	125	88			•					•					•			
		PJ1515/M	125	125				•					•					•		
		PJ1809/M	155	68							•									
		PJ2215/M	198	125					•					•					•	
		PJ3022/M	275	198						•					•					•
Wall mounting brackets	Set of 2	PJ/WMB	–	–	•	•	•	•	•	•	•	•	•	•	•	•	•	•	•	•
DIN rail – aluminium		PJ/D11	–	85	•	•	•					•				•	•			
		PJ/D15	–	125			•	•	•			•	•	•			•	•	•	
		PJ/D22	–	195					•	•				•	•				•	•
		PJ/D30	–	275						•					•					•

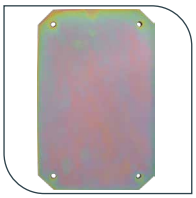
Metal mounting pan

PJ/WMB

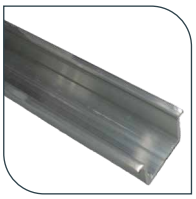
Aluminium DIN rail

TECHNICAL DRAWINGS

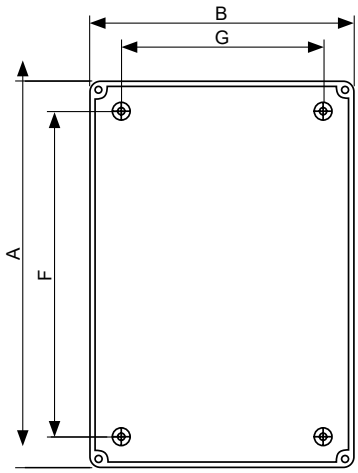

Front View

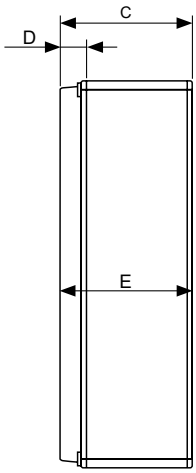

Side View

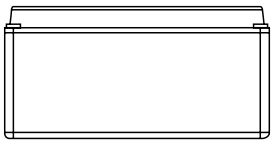
Bottom View

Polynova PS

High Performance Non-Metallic Enclosures

RAL7035 NON-MET IP 67 IK 08

- Designed for environments that require a high IP rating including housing terminations, signal infrastructure, pushbuttons and switchgear.
- Suitable for power distribution, junction and marshalling, process control and automation.
- Enclosures can be installed from the front.
- Capable of withstanding temperatures of -40ºC to 75ºC.
- Conformity, Approvals:
  - UL94, V1 rating
  - IEC695: 960º Glow Wire Test
  - Halogen free (LSZH)
- Manufactured from UV stabilised polyester (opaque) or polycarbonate (transparent lid).
- Light Grey RAL7035.

ORDERING GUIDE

Part Number		Dimensions (mm)							
		External				Internal	Mounting Centres		
Opaque	Transparent	Height (A)	Width (B)	Depth (C)	Cover Depth (D)	Usable Depth (E)	Height (F)	Width (G)	Weight (kg)
PS110804	PS110804T	110	80	45	20	40	92	62	0.2
PS060505*	–	65	50	55	20	50	52	37	0.1
PS160805	PS160805T	160	80	55	15	50	145	66	0.2
PS080806	PS080806T	82	80	60	15	55	70	68	0.2
PS110807	PS110807T	110	80	70	20	65	92	62	0.2
PS180807	PS180807T	180	80	70	20	65	162	62	0.3
PS121207	PS121207T	125	125	75	20	70	105	105	0.2
PS171207	PS171207T	175	125	75	25	70	157	109	0.4
PS201507	PS201507T	200	150	75	25	70	182	132	0.5
PS251707	PS251707T	250	175	75	25	70	232	157	0.6
PS130808	PS130808T	130	80	85	35	80	112	62	0.3
PS250808	PS250808T	250	80	85	35	80	232	62	0.4
PS160809	PS160809T	160	80	90	15	85	145	66	0.2
PS202009	PS202009T	200	200	95	20	90	182	182	0.7
PS121210	PS121210T	125	125	100	20	95	105	105	0.4
PS171210	PS171210T	175	125	100	50	95	157	109	0.5
PS171710	PS171710T	175	175	100	50	95	157	157	0.5
PS201510	PS201510T	200	150	100	20	95	182	132	0.6
PS251510	PS251510T	250	150	100	20	95	232	132	0.8
PS251710	PS251710T	250	175	100	50	95	232	157	0.6
PS171712	PS171712T	175	175	125	75	120	157	157	0.5
PS201513	PS201513T	200	150	130	50	125	182	132	0.8
PS202013	PS202013T	200	200	130	20	125	182	182	0.9
PS251513	PS251513T	250	150	130	50	125	232	132	0.9

* Mounting feet included, all other units mount through the enclosure corners with no drilling required

ACCESSORIES

Product	Description	Part Number	Dimensions (mm) Height	Width	Thick	PS110804 (/T)	PS060505	PS160805 (/T)	PS080806	PS110807 (/T)	PS180807 (/T)	PS121207 (/T)	PS171207 (/T)	PS201507 (/T)	PS251707 (/T)	PS130808 (/T)	PS250808 (/T)	PS160809 (/T)	PS202009 (/T)	PS121210 (/T)	PS171210 (/T)	PS171710 (/T)	PS201510 (/T)	PS251510 (/T)	PS251710 (/T)	PS171712 (/T)	PS201513 (/T)	PS202013 (/T)	PS251513 (/T)
Mounting pan	Insulated	PS1108/I	96	68	3.5	•				•																			
		PS1212/I	111	111	3.5							•								•									
		PS1308/I	116	68	3.5											•													
		PS1712/I	161	111	3.5								•								•								
		PS1717/I	161	161	3.5																	•				•			
		PS1808/I	165	68	3.5						•																		
		PS2015/I	186	136	3.5									•									•				•		
		PS2020/I	186	186	3.5														•									•	
		PS2508/I	235	68	3.5												•												
		PS2515/I	235	136	3.5																			•					•
		PS2517/I	235	156	3.5										•										•				

TECHNICAL DRAWINGS

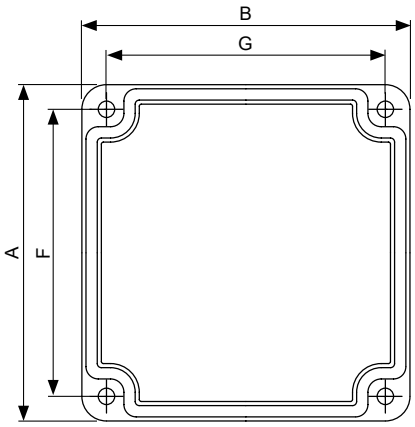

Front View

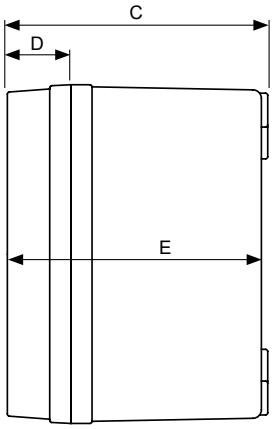

Side View

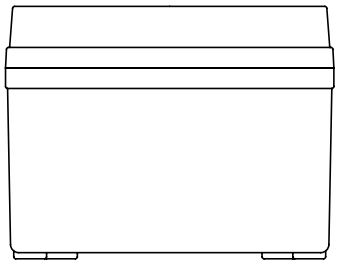

Bottom View

Polynova PC

Enclosure & Distribution System

RAL7035 NON-MET IP 66 IK 10

- Suitable for housing terminations and electrical components for low voltage control systems and distribution.
- Excellent resistance to mechanical impact and aggressive chemicals.
- Raised mounting points prevent build up of materials behind enclosure body.
- Capable of withstanding temperatures -30ºC to 120ºC.
- Conformity, Approvals:
  - UL94, V1 rating
  - IEC695-2-1: 960º Glow Wire Test
  - Halogen free (LSZH)
- Manufactured from UV stabilised glass reinforced polyester (opaque lid) and polycarbonate (transparent lid).
- Light Grey RAL7035.

Comes standard with:

- Insulated mounting pan
- Thermoplastic screws

ORDERING GUIDE

Part Number		Dimensions (mm)							
		External				Internal	Mounting Centres		
Opaque	Transparent	Height (A)	Width (B)	Depth (C)	Cover Depth (D)	Usable Depth (E)	Height (F)	Width (G)	Weight (kg)
PC131313*	PC131313T*	135	135	130	20	110	115	115	0.6
PC181313*	PC181313T*	180	135	130	20	110	160	115	0.8
PC181813*	PC181813T*	180	180	130	20	110	160	160	1.0
PC271313*	PC271313T*	270	135	130	20	110	253	115	1.1
PC271817	PC271817T	270	180	170	42	150	245	155	1.7
PC272717	PC272717T	270	270	170	42	150	245	245	2.3
PC361817	PC361817T	360	180	170	42	150	335	155	2.2
PC362717	PC362717T	360	270	170	42	150	335	245	2.9
PC363617	PC363617T	360	360	170	42	150	335	335	3.6
PC542717	PC542717T	540	270	170	42	150	515	245	4.1
PC543617	PC543617T	540	360	170	42	150	515	335	5.5
PC545417	PC545417T	540	540	170	42	150	515	515	8.0
PC362720	PC362720T	360	270	205	72	180	335	245	3.2
PC363620	PC363620T	360	360	205	72	180	335	335	3.9
PC542720	PC542720T	540	270	205	72	180	515	245	5.0
PC543620	PC543620T	540	360	205	72	180	515	335	6.0
PC545420	PC545420T	540	540	205	72	180	515	515	8.5
PC723620	PC723620T	720	360	205	72	180	695	335	8.0
PC725420	PC725420T	720	540	205	72	180	695	515	11.0

* Opaque parts material is polyamide.

ACCESSORIES

Product	Description	Part Number	Dimensions (mm) Height	Width	Depth	PC131313(/T)	PC181313(/T)	PC181813(/T)	PC271313(/T)	PC271817(/T)	PC272717(/T)	PC361817(/T)	PC362717(/T)	PC363617(/T)	PC542717(/T)	PC543617(/T)	PC545417(/T)	PC362720(/T)	PC363620(/T)	PC542720(/T)	PC543620(/T)	PC545420(/T)	PC723620(/T)	PC725420(/T)
Mounting pan	Insulated	PCBB1813	142	97	3		•																	
		PCBB1818	142	142	3			•																
		PCBB2718	220	130	3					•														
		PCBB2727	220	220	3						•													
		PCBB2736	220	310	3								•					•						
		PCBB3636	310	310	3									•					•					
		PCBB5427	490	220	3										•					•				
		PCBB5436	490	310	3											•					•			
		PCBB5454	490	490	3												•					•		
		PCBB7254	670	490	3																			•
Rigid hinge	Pair	PCEH	–	–	–	•	•	•	•	•	•	•	•	•	•	•	•	•	•	•	•	•	•	•
Internal hinge	Each	PCIH	–	–	–	•	•	•	•	•	•	•	•	•	•	•	•	•	•	•	•	•	•	•
Screws	Large, slotted	PCSD18	–	–	–					•	•	•	•	•	•	•	•	•	•	•	•	•	•	•
Vent valve kit	Pair	PCVV	-	-	-	•	•	•	•	•	•	•	•	•	•	•	•	•	•	•	•	•	•	•

TECHNICAL DRAWINGS

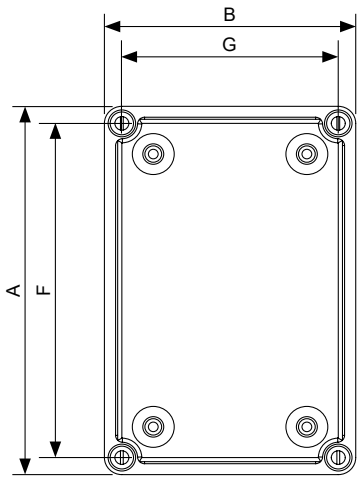

Front View

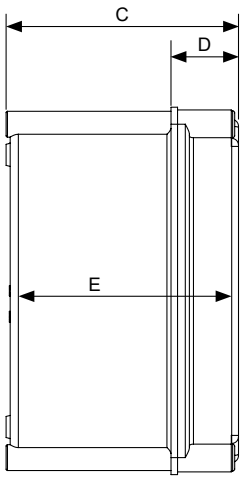

Side View

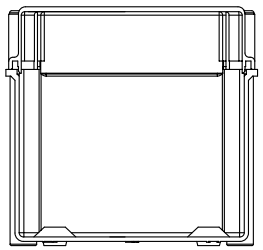

Side Section with Internals

Polynova PM

Modular Enclosures & Distribution System

RAL7035 NON-MET IP 65 IK 08

- Suitable for general electrical applications including power distribution, junction and marshalling, process control and automation.
- Designed for use as an individual enclosure or arranged in combinations to form complete distribution banks.
- Modularity allows for changing depth without comprising the IP rating.
- Capable of withstanding temperatures -25ºC to 120ºC.
- Conformity, Approvals:
  - UL94, V1 rating
  - IEC695: 960º Glow Wire Test
  - Halogen free (LSZH)
- Manufactured from UV stabilised polycarbonate.
- Light Grey RAL7035.

Comes standard with:

- Insulated mounting pan
- Thermoplastic screws

ORDERING GUIDE

Part Number		Dimensions (mm)								
		External			Internal	Mounting Pan		Mounting Centres		
Opaque	Transparent	Height (A)	Width (B)	Depth (C)	Usable Depth (D)	Height (E)	Width (F)	Height (G)	Width (H)	Weight (kg)
PM2718	PM2718/T	270	180	167	140	200	110	245	155	1.5
PM2727	PM2727/T	270	270	167	140	200	200	245	245	2.0
PM3627	PM3627/T	360	270	167	140	290	200	335	245	2.6
PM5427	PM5427/T	540	270	167	140	470	200	515	245	3.7
PM5436	PM5436/T	540	360	167	140	470	290	515	335	5.0

TECHNICAL DRAWINGS

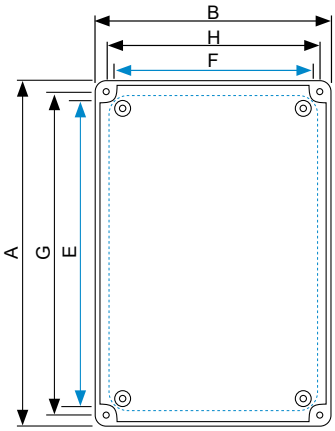

Front View

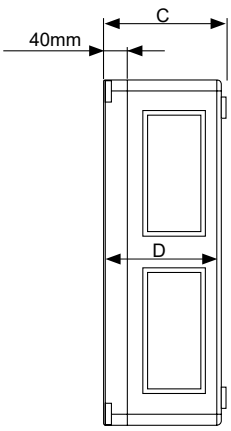

Side View

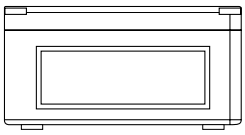

Bottom View

ACCESSORIES

Product	Description	Catalogue No.	Dimensions (mm) Height	Width	Thick	PM2718(/T)	PM2727(/T)	PM3627(/T)	PM5427(/T)	PM5436(/T)
Mounting pan	Metal	PM2718/M	240	150	2	•				
		PM2727/M	240	240	2		•			
		PM3627/M	330	240	2			•		
		PM5427/M	510	240	2				•	
		PM5436/M	510	330	2					•
	Insulated	PM2718/I	240	150	2	•				
		PM5427/I	510	240	2				•	
Mounting pan spacers	20mm offset M8	PM/RS20 ^	–	–	–	•	•	•	•	•
Depth spacers – non-metallic	55mm	PM2718/S	270	180	–	•				
		PM3627/S	360	270	–			•		
		PM5427/S ^	540	270	–				•	
		PM5436/S	540	360	–					•
DIN rail – aluminium	215mm long	PM/D2	–	–	–					
	308mm long	PM/D3	–	–	–	•	•	•	•	
Rail kit – C section (for mounting DIN rail)	215mm long	PM/CR2	–	–	–			•		•
	308mm long	PM/CR3	–	–	–				•	•
	485mm long	PM/CR5	–	–	–				•	•
Cover fixing accessories	screwdriver slot cover screw	PM/SS	–	–	–	•	•	•	•	•
Hinges – lid	Brass (quantity 1)	PM/HM*	–	–	–	•	•	•	•	•
Gasket for hinging lids	For PM/HM hinges (2 metres)	PM/HG ^	–	–	–	•	•	•	•	•
1/4 turn screw		PM/FS				•	•	•	•	•
Screw with sealing hole		PM/WS				•	•	•	•	•

* PM/HG is required when ordering PM/HM to maintain IP rating
^ Run out stock

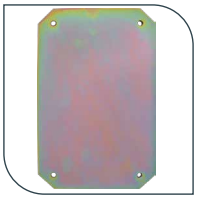
Metal mounting pan

Insulated mounting pan

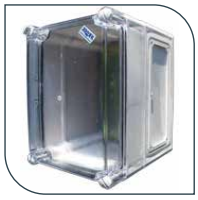
Depth spacers 55mm

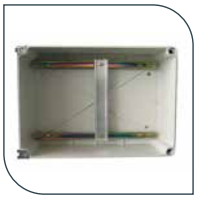
Rail kit – C Section

Polynova PN

Hinged Non-Metallic Enclosure System

RAL7035 NON-MET IP 67 IK 08

- Designed for applications that require regular access for maintenance.
- Suitable for termination of electrical circuits, housing electronics and signal infrastructure.
- Easy-to-use latch assembly.
- Hinged and latched lid for easy opening.
- 180º door opening.
- Capable of withstanding temperatures -40ºC to 75ºC.
- Conformity, Approvals:
  - UL94, V1 rating
  - IEC695: 960º Glow Wire Test
  - Halogen free (LSZH)
- Manufactured from UV stabilised polyester (opaque lid) and polycarbonate (transparent lid).
- Light Grey RAL7035.

Comes standard with:
- Insulated mounting pan
- Latches
- Wall mount brackets

ORDERING GUIDE

Part Number		Dimensions (mm)							
		External				Internal	Mounting Centres		
Opaque	Transparent	Height (A)	Width (B)	Depth (C)	Cover Depth (D)	Usable Depth (E)	Height (F)	Width (G)	Weight (kg)
PN131007	PN131007T	130	100	70	20	65	96	66	0.2
PN151007	PN151007T	150	100	70	20	65	116	66	0.2
PN201007	PN201007T	200	100	70	20	65	166	66	0.3
PN312013	PN312013T	308	203	132	30	125	256	154	0.9
PN362515	PN362515T	360	250	150	30	145	310	210	1.9
PN453516	PN453516T	450	350	160	30	155	402	302	2.2
PN504020	PN504020T	500	400	200	30	195	454	354	3.2
PN534320	PN534320T	530	430	200	30	195	457	357	4.3
PN605025#	PN605025T#	635	535	250	30	245	577	477	7.5
PN705025#	PN705025T#	735	535	250	30	245	677	477	8.5

Enclosures supplied with a metal mounting pan as standard

TECHNICAL DRAWINGS

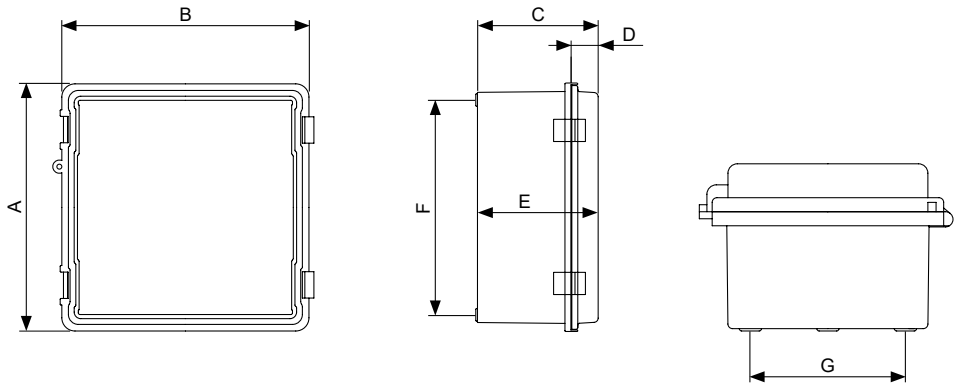

Front View Side View Bottom View

ACCESSORIES

Product	Description	Part Number	Dimensions (mm) Height	Width	Thick	PN131007(/T)	PN151007(/T)	PN201007(/T)	PN312013(/T)	PN362515(/T)	PN453516(/T)	PN504020(/T)	PN534320(/T)	PN605025(/T)	PN705025(/T)
Mounting pan	Metal	PN1310/M	96	68	1.6	•									
		PN1510/M	116	68	1.6		•								
		PN2010/M	165	68	1.6			•							
		PN1515/M	124	124	1.6										
		PN3120/M	267	170	1.6				•						
		PN3625/M	361	217	1.6					•					
		PN3929/M	362	265	1.6										
		PN4535/M	420	307	1.6						•				
		PN5040/M	463	362	1.6							•			
		PN5343/M	463	362	1.6								•		
		PN6050/M	565	465	1.6									•	
		PN7050/M	665	465	1.6										•
	Insulated	PN1310/I	96	68	3.5	•									
		PN1510/I	116	68	3.5		•								
		PN2010/I	165	68	3.5			•							
		PN3120/I	267	170	3.4				•						
		PN3625/I	316	217	4.3					•					
		PN4535/I	420	307	4.3						•				
		PN5040/I	463	362	4.3							•			
		PN5343/I	463	362	3.5								•		
		PN6050/I	572	472	3.0									•	
		PN7050/I	762	472	3.0										•

Polynova PU

General Purpose Enclosures & Distribution System

RAL7035 NON-MET IP 66 IK 10

- Suitable for applications in harsh environments and requiring easy visual inspection.
- Suitable for low voltage (LV) double insulated applications.
- Capable of withstanding temperatures -30ºC to 120ºC.
- Conformity, Approvals:
  - CE Mark
  - IEC695: 960º Glow Wire Test
  - Halogen free (LSZH)
  - UL94, V1 rating
- 3-point locking comes as standard (except PU302514 enclosures).
- Manufactured from UV stabilised glass reinforced polyester (body) and polycarbonate (transparent window).
- Light Grey RAL7035.

Comes standard with:

- Insulated mounting pan
- Lockable swing handle keyed to 92268 half euro barrel (except PU302514 & PU302514/W which have 1/4 turn lock)

ORDERING GUIDE

Part Number		Dimensions (mm)									
		External			Internal	Mounting Centres		Window			
Plain Door	Window Door	Height (A)	Width (B)	Depth (C)	Usable Depth (D)	Height (E)	Width (F)	Height	Width	Lock Type	Weight (kg)
PU302514	PU302514/W	300	250	140	113	244	180	190	80	¼ turn	1.9
PU403020/3L	PU403020/W3L	400	300	200	173	342	230	280	120	3-point	3.6
PU504020/3L	PU504020/W3L	500	400	200	173	442	330	380	220	3-point	5.0
PU604023/3L	PU604023/W3L	600	400	230	203	540	330	480	220	3-point	7.0
PU605023/3L	PU605023/W3L	600	500	230	203	540	430	480	320	3-point	8.0
PU806030/3L	PU806030/W3L	800	600	300	273	738	530	600	400	3-point	13.0

TECHNICAL DRAWINGS

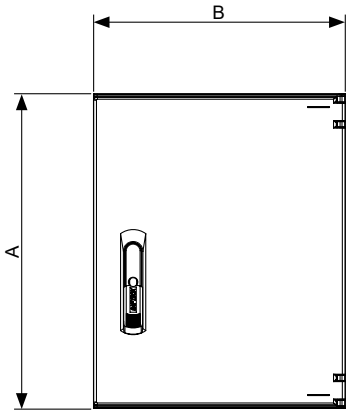

Front View

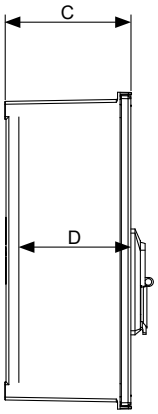

Side View

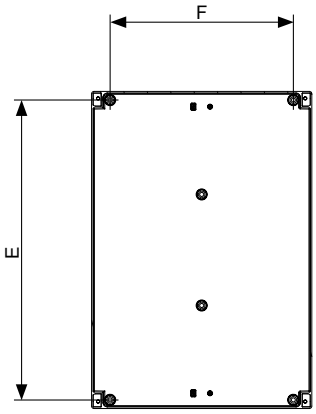

Rear View

ACCESSORIES

Product	Description	Part Number	Dimensions (mm) Height	Width	Depth	PU302514	PU403020/3L	PU504020/3L	PU604023/3L	PU605023/3L	PU806030/3L	PU302514/W	PU403020/W3L	PU504020/W3L	PU604023/W3L	PU605023/W3L	PU806030/ W3L
Mounting pan	Metal	PU3025/M	262	198	2	•						•					
		PU4030/M	360	248	2		•						•				
		PU5040/M	560	348	2			•						•			
		PU6040/M	558	348	2				•						•		
		PU6050/M	558	448	2					•						•	
		PU8060/M	756	548	2						•						•
	Insulated	PU3025/I	262	198	4	•						•					
		PU4030/I	360	248	4		•						•				
		PU5040/I	560	348	4			•						•			
		PU6040/I	558	348	4				•						•		
		PU6050/I	558	448	4					•						•	
		PU8060/I	756	548	4						•						•
Wall-mounting brackets (includes mounting hardware)	Set of 4 (max 50kg)	PU/WMB	–	–	–	•	•	•	•	•	•	•	•	•	•	•	•
Depth adjustable spacer	200mm	PU/SDP200	–	–	–	•	•					•	•				
	230mm	PU/SDP230	–	–	–			•	•	•				•	•	•	
	300mm	PU/SDP300	–	–	–						•						•
Locks (For 300x250x140mm enclosures)	Insert key locking	PU/LCK	–	–	–	•						•					
	Insert 8mm square	PU/LCKS8	–	–	–	•						•					
	Insert 8mm triangle	PU/LCK8T	–	–	–	•						•					
	Padlock attachment	PU/PL	–	–	–	•						•					

PU/WMB (Set of 4)

PU/PL

PU/LCK

PU/LCKS8

PU/LCK8T

Polynova PD

General Purpose Enclosures & Distribution System

RAL7035 NON-MET IP 65 IK 10

- Suitable for a variety of general electrical applications.
- 150º door opening for ease of access to internal systems.
- Capable of withstanding temperatures of -40ºC to 110ºC.
- Conformity, Approvals:
  - UL94, V1 rating
  - IEC695-2-1: 960º Glow Wire Test
  - Halogen free (LSZH)
- Manufactured from UV stabilised glass filled reinforced polyester.
- Light Grey RAL7035.

Comes standard with:
- Insulated mounting pan
- 8mm triangle lock

ORDERING GUIDE

	Dimensions (mm)												
	External				Internal	Opening Size		Mounting Centres		Mounting Pan			
Part Number	Height (A)	Width (B)	Depth (C)	Usable Depth (D)	Usable Depth (E)	Height	Width	Height (F)	Width (G)	Height	Width	Thick	Weight (kg)
PD353015	350	300	160	130	126	300	250	258	219	330	243	4	3.8
PD503020	500	300	200	170	166	450	250	408	219	480	243	4	5.5
PD504020	500	400	200	170	166	450	350	408	319	480	343	4	6.5
PD654020	650	400	200	170	166	600	350	558	319	630	343	6	9.0
PD655025	650	500	250	220	216	600	450	558	419	630	443	6	11.0
PD806030	800	600	300	270	266	750	550	708	519	780	543	6	18.0

TECHNICAL DRAWINGS

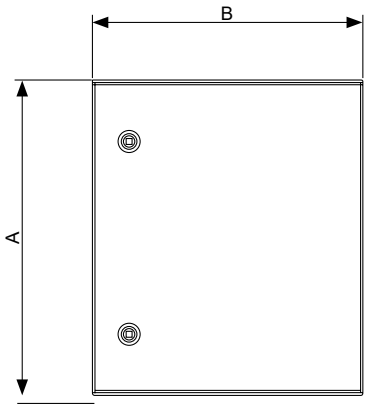

Front View

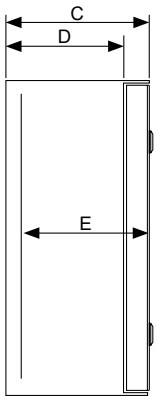

Side View

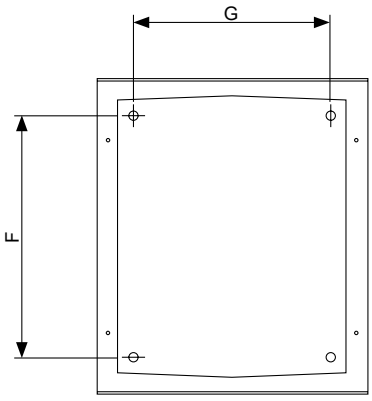

Rear View

ACCESSORIES

Product	Description	Part Number	Dimensions (mm) Height	Dimensions (mm) Width	PD353015	PD503020	PD504020	PD654020	PD655025	PD806030
Mounting pan	Metal	PD3530/M	330	243	•					
		PD5030/M	480	243		•				
		PD5040/M	480	343			•			
		PD6540/M	630	343				•		
		PD6550/M	630	443					•	
		PD8060/M	780	543						•
	Insulated	PD3530/I	330	243	•					
		PD5030/I	480	243		•				
		PD5040/I	480	343			•			
		PD6540/I	630	343				•		
		PD6550/I	630	443					•	
		PD8060/I	780	543						•
Hinged escutcheon	Non-Metallic	PD3530/HE	298	247	•					
		PD5030/HE	448	247		•				
		PD5040/HE	448	347			•			
		PD6540/HE	598	347				•		
		PD6550/HE	598	447					•	
		PD8060/HE	748	547						•
DIN rail mounting kit (incl. escutcheon with DIN cutouts)	24 pole	PD3530/D24			•					
	36 pole	PD5030/D36				•				
	54 pole	PD5040/D54					•			
	72 pole	PD6540/D72						•		
Brackets	Wall-mounted (set of 4)	PD/WMB			•	•	•	•	•	•
	Fixed L	PD/LB			•	•	•	•	•	•
Locks	knob, keyed (427)	PD/LCK			•	•	•	•	•	•
	lock insert 3mm double bit pin	PD/LCKDI3			•	•	•	•	•	•
	lock insert 8mm square	PD/LCKS8			•	•	•	•	•	•
	lock insert 8mm triangle	PD/LCK8T			•	•	•	•	•	•
	replacement lock tongue	PD/RLT			•	•	•	•	•	•

Forte FR

General Purpose Enclosures

RAL7035

Stl

IP 65

- Suitable for a variety of indoor, general electrical applications.
- Designed to be wall-mounted quickly with punched holes on rear as standard.
- 110º door opening
- Manufactured from 1.2mm or 1.6mm steel
- Powdercoated Light Grey RAL7035.

Comes standard with:
- Wall mount brackets
- 2mm steel mounting pan
- Gland plate (200mm deep and above)
- Chromed steel lock with 7mm square steel insert (NI020)
- Earth strap kit

ORDERING GUIDE

	Dimensions (mm)												
	External				Internal	Mounting Pan		Gland Opening		Opening			
Part Number	Height (A)	Width (B)	Depth (C)	Thk.	Usable Depth (D)*	Height (E)	Width (F)	Width (G)	Depth (H)	Height (I)	Width (J)	Number of Locks	Weight (kg)
FR030215	300	200	150	1.2	132	250	150	–	–	256	156	1	3.9
FR030315	300	300	150	1.2	132	250	250	–	–	256	256	1	5.3
FR040315	400	300	150	1.6	132	350	250	–	–	356	256	1	6.5
FR030320	300	300	200	1.2	180	250	250	250	120	256	256	1	6.5
FR040320	400	300	200	1.6	180	350	250	250	120	356	256	1	9.0
FR040420	400	400	200	1.6	180	350	350	250	120	356	356	1	13.0
FR050420	500	400	200	1.6	180	450	350	250	120	456	356	1	12.0
FR060420	600	400	200	1.6	180	550	350	250	120	556	356	1	17.0

* From mounting pan to inside of door

ACCESSORIES

Product	Part Number	Dimensions (mm) Height	Dimensions (mm) Width	FR030215	FR030315	FR040315	FR030320	FR040320	FR040420	FR050420	FR060420
External vent kit (RAL7035)	IPVK/LG	130	130	•	•	•	•	•	•	•	•
Touch up paint (Light Grey RAL7035)	TUP/P29	–	–	•	•	•	•	•	•	•	•

TECHNICAL DRAWINGS

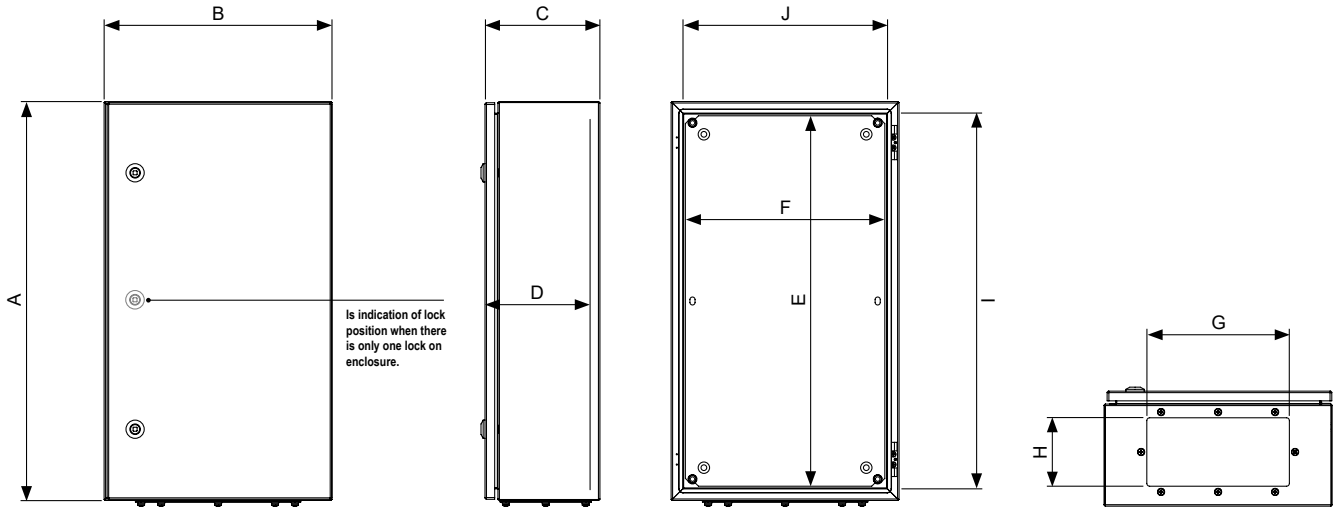

Front View | Side View | Front View (Door removed) | Bottom View

Universal NI – Zinc Coated Steel

General Purpose Enclosures

- Built for industrial and demanding environments.
- Threaded sockets on the rear of the enclosure to allow mounting feet attachment without compromising the IP rating.
- 120º door opening for ease of access to internal systems.
- Conformity, Approvals:
  - CE Mark
  - Lloyds Register #06/10007 (E2)
- Region D wind rated to AS1170.2-2002: Structural design actions - Wind actions
- Manufactured from 1.2/1.6mm zinc coated steel.
- Powdercoated Pebble Grey RAL7032 or X15 Orange.

Comes standard with:

- 2mm steel mounting pan powdercoated white
- Gland plate (200mm deep and above)
- Chromed steel lock with 7mm square steel insert (NI020)
- Door rails
- Earth strap kit

ORDERING GUIDE

Part Number		Dimensions (mm)								No. of Fixing Points (Suits M8 fixings)	Material Thickness (mm)	Weight (kg)
		External			Internal	Mounting Pan		Gland Opening				
Standard	X15 Orange	Height (A)	Width (B)	Depth (C)	Usable Depth (D)*	Height (E)	Width (F)	Width (G)	Depth (H)			
NI03021	NI03021/RO	300	200	150	125	250	150	–	–	4	1.2	3.9
NI03031	NI03031/RO	300	300	150	125	250	250	–	–	4	1.2	5.0
NI03041	NI03041/RO	300	400	150	125	250	350	–	–	4	1.2	6.5
NI04032◊	NI04032/RO◊	400	300	200	175	350	250	250	120	4	1.6	8.0
NI03042	NI03042/RO	300	400	200	175	250	350	250	120	4	1.6	7.5
NI04042◊	NI04042/RO◊	400	400	200	175	350	350	250	120	4	1.6	12.0
NI05042◊	NI05042/RO◊	500	400	200	175	450	350	250	120	4	1.6	14.0
NI06042◊	NI06042/RO◊	600	400	200	175	550	350	250	120	4	1.6	17.0
NI05052◊	NI05052/RO◊	500	500	200	175	450	450	440	120	4	1.6	17.0
NI04062◊	NI04062/RO◊▲	400	600	200	175	350	550	440	120	4	1.6	16.0
NI06062◊	NI06062/RO◊	600	600	200	175	550	550	440	120	4	1.6	23.0
NI08062◊	NI08062/RO◊	800	600	200	175	750	550	440	120	6	1.6	30.0
NI10062◊	NI10062/RO◊▲	1000	600	200	175	950	550	440	120	6	1.6	37.0
NI04043◊	NI04043/RO◊	400	400	300	275	350	350	250	120	4	1.6	14.0
NI06043◊	NI06043/RO◊	600	400	300	275	550	350	250	120	4	1.6	20.0
NI04063◊	NI04063/RO◊▲	400	600	300	275	350	550	440	120	4	1.6	19.0
NI06063◊	NI06063/RO◊	600	600	300	275	550	550	440	120	4	1.6	27.0
NI08063◊	NI08063/RO◊	800	600	300	275	750	550	440	120	6	1.6	34.0
NI10063◊	NI10063/RO◊	1000	600	300	275	950	550	440	120	6	1.6	41.0
NI08083^	NI08083/RO^▲	800	800	300	275	750	750	440	120	6	1.6	43.0
NI10083^	NI10083/RO^▲	1000	800	300	275	950	750	440	120	6	1.6	52.0
NI12083^	NI12083/RO^▲	1200	800	300	275	1150	750	440	120	6	1.6	61.0

* Mounting pan to inside of door
◊ Includes vertical door rails
^ Includes horizontal and vertical door rails
▲ Available on request

Universal NI – Zinc Coated Steel

General Purpose Enclosures

ACCESSORIES

Product	Description	Part Number	Dimensions (mm) Height	Width	Depth	NI03021 (/RO)	NI03031 (/RO)	NI03041 (/RO)	NI04032 (/RO)	NI03042 (/RO)	NI04042 (/RO)	NI05042 (/RO)	NI06042 (/RO)	NI05052 (/RO)	NI04062 (/RO)	NI06062 (/RO)	NI08062 (/RO)	NI10062 (/RO)	NI04043 (/RO)	NI06043 (/RO)	NI04063 (/RO)	NI06063 (/RO)	NI08063 (/RO)	NI10063 (/RO)	NI08083 (/RO)	NI10083 (/RO)	NI12083 (/RO)
Rainhoods	Zinc coated steel	NIRH021	30	175.6	65	•																					
		NIRH031▲	30	275.6	65		•																				
		NIRH032▲	30	275.6	105				•																		
		NIRH041▲	30	375.6	65			•																			
		NIRH042	30	375.6	105					•	•	•	•														
		NIRH043	30	375.6	220														•	•							
		NIRH052▲	30	475.6	105									•													
		NIRH062▲	30	575.6	105										•	•	•	•									
		NIRH063	30	575.6	220																•	•	•	•			
		NIRH082▲	30	775.6	105																						
		NIRH083▲	30	775.6	220																				•	•	•
External vent kits – Zinc coated steel	Pebble Grey RAL7032	IPVK	130	130	–	^	^	^	•	•	•	•	•	•	•	•	•	•	•	•	•	•	•	•	•	•	•
		IPVK16	260	260	–		^	^	^	^		^	^	^	^	^	^	^	•	•	•	•	•	•	•	•	•
	X15 Orange	IPVK/RO	130	130	–	^	^	^	•	•	•	•	•	•	•	•	•	•	•	•	•	•	•	•	•	•	•
		IPVK16/RO▲	260	260	–		^	^	^	^		^	^	^	^	^	^	^	•	•	•	•	•	•	•	•	•
Wall mounting brackets – stainless steel	Set of 4	MEB/S	–	–	–	•	•	•	•	•	•	•	•	•	•	•	•	•	•	•	•	•	•	•	•	•	•
Mounting flange kit – 316 stainless steel		MF2/S▲	75	200	–	•																					
		MF3/S	75	300	–		•		•																		
		MF4/S	75	400	–			•		•	•	•	•						•	•							
		MF5/S▲	75	500	–									•													
		MF6/S▲	75	600	–										•	•	•	•			•	•	•	•			
		MF8/S▲	75	800	–																				•	•	•
Mounting Pan		NIMP0302	250	150	–	•																					
		NIMP0303	250	250	–		•																				
		NIMP0403	350	250	–				•																		
		NIMP0304	250	350	–			•		•																	
		NIMP0404	350	350	–						•								•								
		NIMP0504	450	350	–							•															
		NIMP0604	550	350	–								•							•							
		NIMP0505	450	450	–									•													
		NIMP0406	350	550	–										•						•						
		NIMP0606	550	550	–											•						•					
		NIMP0806	750	550	–												•						•				
		NIMP1006	950	550	–													•						•			
		NIMP0808	750	750	–																				•		
		NIMP1008	950	750	–																					•	
		NIMP1208	1150	750	–																						•
Gland plates	6mm aluminium	SRAGP6/2	290	160	–				•	•	•	•	•						•	•							
		SRAGP6/3	480	160	–									•	•	•	•	•			•	•	•	•	•	•	•
	3mm brass	SRBGP3/2	290	160	–				•	•	•	•	•						•	•							
		SRBGP3/3	480	160	–									•	•	•	•	•			•	•	•	•	•	•	•
	6mm brass	SRBGP6/2	290	160	–				•	•	•	•	•						•	•							
		SRBGP6/3	480	160	–									•	•	•	•	•			•	•	•	•	•	•	•
Replacement Hinge	Kit	NI/H	–	–	–	•	•	•	•	•	•	•	•	•	•	•	•	•	•	•	•	•	•	•	•	•	•
Touch Up Paint (300g)	Pebble Grey RAL7032	TUP/P20	–	–	–	•	•	•	•	•	•	•	•	•	•	•	•	•	•	•	•	•	•	•	•	•	•
	X15 Orange	TUP/P24	–	–	–	•	•	•	•	•	•	•	•	•	•	•	•	•	•	•	•	•	•	•	•	•	•

^ Fits door only
▲ Available on request

TECHNICAL DRAWINGS

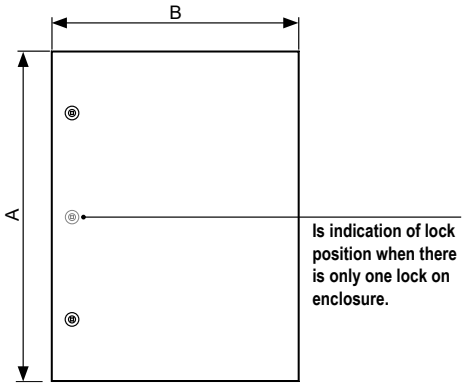

Front View

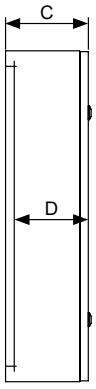

Side View

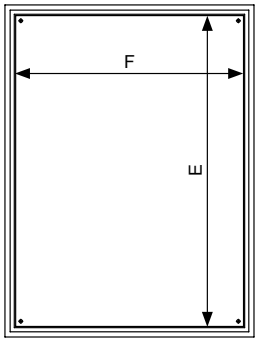

Front View
(Door Removed)

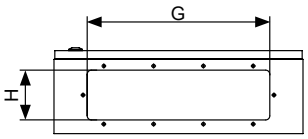

Bottom View

Universal NI – 316 Stainless Steel

General Purpose Enclosures

- Built for industrial and demanding environments.
- Threaded sockets on the rear of the enclosure to allow mounting feet attached without compromising the IP rating.
- 120º door opening for ease of access to internal systems.
- Conformity, Approvals:
  - CE Mark
  - Lloyds Register #06/10007 (E2)
- Region D wind rated to AS1170.2-2002: Structural design actions - Wind actions
- Manufactured from 1.2/1.5mm 316 stainless steel.
- N4 surface finish or Powdercoated X15 Orange.

Comes standard with:

- 2mm steel mounting pan powdercoated white
- Stainless steel lock with 7mm square stainless steel insert (NI020/S)
- Door rails
- Earth strap kit

ORDERING GUIDE

Part Number		Dimensions (mm)									
		External			Internal	Mounting Pan					
316 SS (N4)	X15 Orange	Height (A)	Width (B)	Depth (C)	Usable Depth (D)*	Height (E)	Width (F)	No. of Fixing Points (Suits M8 fixings)	Material Thickness (mm)	Weight (kg)	No. of Locks
NI03021/S	NI03021/SRO	300	200	150	125	250	150	4	1.2	3.9	1
NI03031/S	NI03031/SRO	300	300	150	125	250	250	4	1.2	5.3	1
NI03041/S	NI03041/SRO▲	300	400	150	125	250	350	4	1.2	6.8	1
NI04031/S	NI04031/SRO▲	400	300	150	125	350	250	4	1.2	6.7	1
NI04032/S◊	NI04032/SRO◊	400	300	200	175	350	250	4	1.2	9.0	1
NI03042/S	NI03042/SRO▲	300	400	200	175	250	350	4	1.5	9.0	1
NI04042/S◊	NI04042/SRO◊	400	400	200	175	350	350	4	1.5	11.0	1
NI05042/S◊	NI05042/SRO◊▲	500	400	200	175	450	350	4	1.5	14.0	1
NI06042/S◊	NI06042/SRO◊	600	400	200	175	550	350	4	1.5	16.0	1
NI05052/S◊	NI05052/SRO◊	500	500	200	175	450	450	4	1.5	16.0	1
NI04062/S◊	NI04062/SRO◊▲	400	600	200	175	350	550	4	1.5	16.0	1
NI06062/S◊	NI06062/SRO◊	600	600	200	175	550	550	4	1.5	22.0	1
NI08062/S◊	NI08062/SRO◊▲	800	600	200	175	750	550	6	1.5	29.0	2
NI10062/S◊	NI10062/SRO◊▲	1000	600	200	175	950	550	6	1.5	28.0	2
NI10082/S◊	NI10082/SRO◊▲	1000	800	200	175	950	750	4	1.5	45.0	2
NI04043/S◊	NI04043/SRO◊▲	400	400	300	275	350	350	4	1.5	19.0	1
NI06043/S◊	NI06043/SRO◊▲	600	400	300	275	550	350	4	1.5	19.0	1
NI04063/S◊	NI04063/SRO◊▲	400	600	300	275	350	550	4	1.5	19.0	1
NI06063/S◊	NI06063/SRO◊	600	600	300	275	550	550	4	1.5	25.0	1
NI08063/S◊	NI08063/SRO◊▲	800	600	300	275	750	550	6	1.5	32.0	2
NI10063/S◊	NI10063/SRO◊▲	1000	600	300	275	950	550	6	1.5	39.0	2
NI08083/S^	NI08083/SRO^▲	800	800	300	275	750	750	6	1.5	41.0	2
NI10083/S^	NI10083/SRO^▲	1000	800	300	275	950	750	6	1.5	49.0	2
NI12083/S^	NI12083/SRO^▲	1200	800	300	275	1150	750	8	1.5	58.0	2

* Mounting pan to inside of door
◊ Includes vertical door rails
^ Includes horizontal and vertical door rails
▲ Available on request

Gland plates and cutouts are not supplied as standard on NI stainless steel enclosures. Please contact your local sales representative to discuss your requirements

Universal NI – 316 Stainless Steel

General Purpose Enclosures

ACCESSORIES

Product	Description	Part Number	Dimensions (mm) Height	Width	Depth	NI03021/S (/SRO)	NI03031/S (/SRO)	NI03041/S (/SRO)	NI04031/S (/SRO)	NI04032/S (/SRO)	NI03042/S (/SRO)	NI04042/S (/SRO)	NI05042/S (/SRO)	NI06042/S (/SRO)	NI05052/S (/SRO)	NI04062/S (/SRO)	NI06062/S (/SRO)	NI08062/S (/SRO)	NI10062/S (/SRO)	NI10082/S (/SRO)	NI04043/S (/SRO)	NI06043/S (/SRO)	NI04063/S (/SRO)	NI06063/S (/SRO)	NI08063/S (/SRO)	NI10063/S (/SRO)	NI08083/S (/SRO)	NI10083/S (/SRO)	NI12083/S (/SRO)
Rainhoods	316 stainless steel	NIRH021/S (SRO)▲	30	175.6	65	•																							
		NIRH031/S (SRO)▲	30	275.6	65		•		•																				
		NIRH032/S (SRO)▲	30	275.6	105					•																			
		NIRH041/S▲ (SRO)▲	30	375.6	65			•																					
		NIRH042/S (SRO)▲	30	375.6	105						•	•	•	•															
		NIRH043/S (SRO)▲	30	375.6	220																•	•							
		NIRH052/S (SRO)▲	30	475.6	105										•														
		NIRH062/S (SRO)▲	30	575.6	105											•	•	•	•										
		NIRH063/S (SRO)▲	30	575.6	220																		•	•	•	•			
		NIRH082/S▲ (SRO)▲	30	775.6	105															•									
		NIRH083/S (SRO)▲	30	775.6	220																						•	•	•
External vent kits	316 stainless steel	IPVK/S	130	130	–	^	^	^	•	•	•	•	•	•	•	•	•	•	•	•	•	•	•	•	•	•	•	•	•
		IPVK/SRO▲	130	130	–	^	^	^	•	•	•	•	•	•	•	•	•	•	•	•	•	•	•	•	•	•	•	•	•
		IPVK16/S▲	260	260	–	^	^	^	^	^	^	^	^	^	^	^	^	^	^	^	•	•	•	•	•	•	•	•	•
		IPVK16/SRO▲	260	260	–	^	^	^	^	^	^	^	^	^	^	^	^	^	^	^	•	•	•	•	•	•	•	•	•
Wall mounting brackets – 316 stainless steel	Set of 4	MEB/S	–	–	–	•	•	•	•	•	•	•	•	•	•		•	•		•		•		•	•	•	•	•	•
Mounting flange kits	316 stainless steel	MF2/S▲	75	200	–	•																							
		MF3/S	75	300	–		•		•	•																			
		MF4/S	75	400	–			•			•	•	•	•							•	•							
		MF5/S▲	75	500	–										•														
		MF6/S▲	75	600	–											•	•	•	•				•	•	•	•			
		MF8/S▲	75	800	–															•							•	•	•
Mounting Pan -		NIMP0302	250	150	–	•																							
		NIMP0303	250	250	–		•																						
		NIMP0403	350	250	–				•	•																			
		NIMP0304	250	350	–			•			•																		
		NIMP0404	350	350	–							•									•								
		NIMP0504	450	350	–								•																
		NIMP0604	550	350	–									•								•							
		NIMP0505	450	450	–										•														
		NIMP0406	350	550	–											•							•						
		NIMP0606	550	550	–												•							•					
		NIMP0806	750	550	–													•							•				
		NIMP1006	950	550	–														•							•			
		NIMP0808	750	750	–																						•		
		NIMP1008	950	750	–															•								•	
		NIMP1208	1150	750	–																								•
Replacement Hinge	Kit	NI/H	–	–	–	•	•	•	•	•	•	•	•	•	•	•	•	•	•	•	•	•	•	•	•	•	•	•	•

^ Fits door only
▲ Available on request

TECHNICAL DRAWINGS

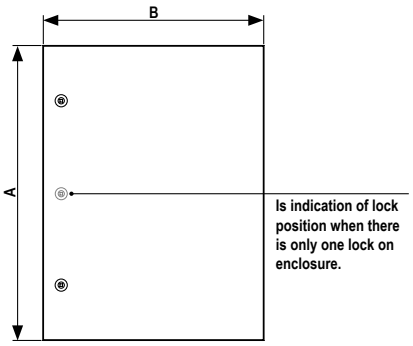

Front View

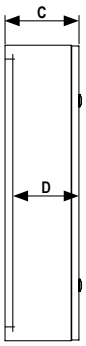

Side View

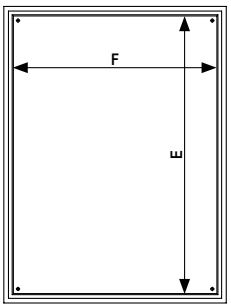

Front View
(Door Removed)

Universal NI Viewing Window– Zinc Coated Steel

General Purpose Enclosures

- Built for industrial and demanding environments.
- Threaded sockets on the rear of the enclosure to allow mounting feet attachment without compromising the IP rating.
- 120º door opening for ease of access to internal systems.
- Conformity, Approvals:
  - CE Mark
  - Lloyds Register #06/10007 (E2)
- Region D wind rated to AS1170.2-2002: Structural design actions - Wind actions
- Manufactured from 1.6mm zinc coated steel.
- Powdercoated Pebble Grey RAL7032 or X15 Orange.

Comes standard with:

- 2mm steel mounting pan powdercoated white
- Gland plate (200mm deep and above)
- Chromed steel lock with 7mm square steel insert (NI020)
- Door rails
- Earth strap kit
- Laminated glass viewing window - 5.4mm thickness

ORDERING GUIDE

Part Number		Dimensions (mm)							
		External			Internal	Mounting Pan		Viewing Window	
Standard	X15 Orange	Height (A)	Width (B)	Depth (C)	Usable Depth (D)*	Height (E)	Width (F)	Height (G)	Width (H)
NI04042/WG◊▲	NI04042/RO/WG◊▲	400	400	200	175	350	350	185	185
NI05042/WG◊▲	NI05042/RO/WG◊▲	500	400	200	175	450	350	278	185
NI06042/WG◊▲	NI06042/RO/WG◊▲	600	400	200	175	550	350	378	185
NI05052/WG◊▲	NI05052/RO/WG◊▲	500	500	200	175	450	450	278	273
NI04062/WG◊▲	NI04062/RO/WG◊▲	400	600	200	175	350	550	185	373
NI06062/WG◊▲	NI06062/RO/WG◊▲	600	600	200	175	550	550	378	373
NI08062/WG◊▲	NI08062/RO/WG◊▲	800	600	200	175	750	550	578	373
NI10062/WG◊▲	NI10062/RO/WG◊▲	1000	600	200	175	950	550	778	373
NI04043/WG◊▲	NI04043/RO/WG◊▲	400	400	300	275	350	350	185	185
NI06043/WG◊▲	NI06043/RO/WG◊▲	600	400	300	275	550	350	378	185
NI04063/WG◊▲	NI04063/RO/WG◊▲	400	600	300	275	350	550	185	373
NI06063/WG◊▲	NI06063/RO/WG◊▲	600	600	300	275	550	550	378	373
NI08063/WG◊▲	NI08063/RO/WG◊▲	800	600	300	275	750	550	578	373
NI10063/WG◊▲	NI10063/RO/WG◊▲	1000	600	300	275	950	550	778	373
NI08083/WG^▲	NI08083/RO/WG^▲	800	800	300	275	750	750	578	573
NI10083/WG^▲	NI10083/RO/WG^▲	1000	800	300	275	950	750	778	573
NI12083/WG^▲	NI12083/RO/WG^▲	1200	800	300	275	1150	750	978	573

* Mounting pan to inside of door
◊ Includes vertical door rails
^ Includes horizontal and vertical door rails
▲ Available on request

Window corner radius is 100mm on all sizes of enclosures.

ACCESSORIES

Product	Description	Part Number	Dimensions (mm) Height	Width	Depth	NI03021/WG (/RO)	NI03031/WG (/RO)	NI03041/WG (/RO)	NI04032/WG (/RO)	NI03042/WG (/RO)	NI04042/WG (/RO)	NI05042/WG (/RO)	NI06042/WG (/RO)	NI05052/WG (/RO)	NI04062/WG (/RO)	NI06062/WG (/RO)	NI08062/WG (/RO)	NI10062/WG (/RO)	NI04043/WG (/RO)	NI06043/WG (/RO)	NI04063/WG (/RO)	NI06063/WG (/RO)	NI08063/WG (/RO)	NI10063/WG (/RO)	NI08083/WG (/RO)	NI10083/WG (/RO)	NI12083/WG (/RO)
Rainhoods	Zinc coated steel	NIRH021	30	175.6	65	•																					
		NIRH031▲	30	275.6	65		•																				
		NIRH032▲	30	275.6	105				•																		
		NIRH041▲	30	375.6	65			•																			
		NIRH042	30	375.6	105					•	•	•	•														
		NIRH043	30	375.6	220														•	•							
		NIRH052▲	30	475.6	105									•													
		NIRH062▲	30	575.6	105										•	•	•	•									
		NIRH063	30	575.6	220																•	•	•	•			
		NIRH082▲	30	775.6	105																						
		NIRH083▲	30	775.6	220																				•	•	•
External vent kits – Zinc coated steel	Pebble Grey RAL7032	IPVK	130	130	–	^	^	^	•	•	•	•	•	•	•	•	•	•	•	•	•	•	•	•	•	•	•
		IPVK16	260	260	–		^	^	^	^		^	^	^	^	^	^	^	•	•	•	•	•	•	•	•	•
	X15 Orange	IPVK/RO	130	130	–	^	^	^	•	•	•	•	•	•	•	•	•	•	•	•	•	•	•	•	•	•	•
		IPVK16/RO▲	260	260	–		^	^	^	^		^	^	^	^	^	^	^	•	•	•	•	•	•	•	•	•
Wall mounting bracket s – 316 stainless steel	Set of 4	MEB/S	–	–	–	•	•	•	•	•	•	•	•	•	•	•	•	•	•	•	•	•	•	•	•	•	•
Mounting flange kit – 316 stainless steel		MF2/S▲	75	200	–	•																					
		MF3/S	75	300	–		•		•																		
		MF4/S	75	400	–			•		•	•	•	•						•	•							
		MF5/S▲	75	500	–									•													
		MF6/S▲	75	600	–										•	•	•	•			•	•	•	•			
		MF8/S▲	75	800	–																				•	•	•
Mounting Pan		NIMP0302	250	150	–	•																					
		NIMP0303	250	250	–		•																				
		NIMP0403	350	250	–				•																		
		NIMP0304	250	350	–			•		•																	
		NIMP0404	350	350	–						•								•								
		NIMP0504	450	350	–							•															
		NIMP0604	550	350	–								•							•							
		NIMP0505	450	450	–									•													
		NIMP0406	350	550	–										•						•						
		NIMP0606	550	550	–											•						•					
		NIMP0806	750	550	–												•						•				
		NIMP1006	950	550	–													•						•			
		NIMP0808	750	750	–																				•		
		NIMP1008	950	750	–																					•	
		NIMP1208	1150	750	–																						•
Gland plates	6mm aluminium	SRAGP6/2	290	160	–				•	•	•	•	•						•	•							
		SRAGP6/3	480	160	–									•	•	•	•	•			•	•	•	•	•	•	•
	3mm brass	SRBGP3/2	290	160	–				•	•	•	•	•						•	•							
		SRBGP3/3	480	160	–									•	•	•	•	•			•	•	•	•	•	•	•
	6mm brass	SRBGP6/2	290	160	–				•	•	•	•	•						•	•							
		SRBGP6/3	480	160	–									•	•	•	•	•			•	•	•	•	•	•	•
Replacement Hinge	Kit	NI/H	–	–	–	•	•	•	•	•	•	•	•	•	•	•	•	•	•	•	•	•	•	•	•	•	•
Touch Up Paint (300g)	Pebble Grey RAL7032	TUP/P20	–	–	–	•	•	•	•	•	•	•	•	•	•	•	•	•	•	•	•	•	•	•	•	•	•
	X15 Orange	TUP/P24	–	–	–	•	•	•	•	•	•	•	•	•	•	•	•	•	•	•	•	•	•	•	•	•	•

^ Fits door only
▲ Available on request

Universal NI Viewing Window – 316 Stainless Steel

General Purpose Enclosures

- Built for industrial and demanding environments.
- Threaded sockets on the rear of the enclosure to allow mounting feet attached without compromising the IP rating.
- 120º door opening for ease of access to internal systems.
- Conformity, Approvals:
  - CE Mark
  - Lloyds Register #06/10007 (E2)
- Region D wind rated to AS1170.2-2002: Structural design actions - Wind actions
- Manufactured from 1.5mm 316 stainless steel.
- N4 surface finish or powdercoated X15 orange.

Comes standard with:

- 2mm steel mounting pan powdercoated white
- Stainless steel lock with 7mm square stainless steel insert (NI020/S)
- Door rails
- Earth strap kit
- Laminated glass viewing window - 5.4mm thickness

ORDERING GUIDE

Part Number		Dimensions (mm)							
		External			Internal	Mounting Pan		Viewing Window	
Standard	X15 Orange	Height (A)	Width (B)	Depth (C)	Usable Depth (D)*	Height (E)	Width (F)	Height	Width
NI04042/S/WG◊▲	NI04042/SRO/WG◊▲	400	400	200	175	350	350	185	185
NI05042/S/WG◊▲	NI05042/SRO/WG◊▲	500	400	200	175	450	350	278	185
NI06042/S/WG◊▲	NI06042/SRO/WG◊▲	600	400	200	175	550	350	378	185
NI05052/S/WG◊▲	NI05052/SRO/WG◊▲	500	500	200	175	450	450	278	273
NI04062/S/WG◊▲	NI04062/SRO/WG◊▲	400	600	200	175	350	550	185	373
NI06062/S/WG◊▲	NI06062/SRO/WG◊▲	600	600	200	175	550	550	378	373
NI08062/S/WG◊▲	NI08062/SRO/WG◊▲	800	600	200	175	750	550	578	373
NI10062/S/WG◊▲	NI10062/SRO/WG◊▲	1000	600	200	175	950	550	778	373
NI10082/S/WG◊▲	NI10082/SRO/WG◊▲	1000	800	200	175	950	750	778	573
NI04043/S/WG◊▲	NI04043/SRO/WG◊▲	400	400	300	275	350	350	185	185
NI06043/S/WG◊▲	NI06043/SRO/WG◊▲	600	400	300	275	550	350	378	185
NI04063/S/WG◊▲	NI04063/SRO/WG◊▲	400	600	300	275	350	550	185	373
NI06063/S/WG◊▲	NI06063/SRO/WG◊▲	600	600	300	275	550	550	378	373
NI08063/S/WG◊▲	NI08063/SRO/WG◊▲	800	600	300	275	750	550	578	373
NI10063/S/WG◊▲	NI10063/SRO/WG◊▲	1000	600	300	275	950	550	778	373
NI08083/S/WG^▲	NI08083/SRO/WG^▲	800	800	300	275	750	750	578	573
NI10083/S/WG^▲	NI10083/SRO/WG^▲	1000	800	300	275	950	750	778	573
NI12083/S/WG^▲	NI12083/SRO/WG^▲	1200	800	300	275	1150	750	978	573

* Mounting pan to inside of door
◊ Includes vertical door rails
^ Includes horizontal and vertical door rails
▲ Available on request

Gland plates and cutouts are not supplied as standard on NI stainless steel enclosures. Please contact your local sales representative to discuss your requirements

Window corner radius is 100mm on all sizes of enclosures.

ACCESSORIES

Product	Description	Part Number	Dimensions (mm) Height	Width	Depth	NI03021/S/WG (/SRO)	NI03031/S/WG (/SRO)	NI03041/S/WG (/SRO)	NI04031/S/WG (/SRO)	NI04032/S/WG (/SRO)	NI03042/S/WG (/SRO)	NI04042/S/WG (/SRO)	NI05042/S/WG (/SRO)	NI06042/S/WG (/SRO)	NI05052/S/WG (/SRO)	NI04062/S/WG (/SRO)	NI06062/S/WG (/SRO)	NI08062/S/WG (/SRO)	NI10062/S/WG (/SRO)	NI10082/S/WG (/SRO)	NI04043/S/WG (/SRO)	NI06043/S/WG (/SRO)	NI04063/S/WG (/SRO)	NI06063/S/WG (/SRO)	NI08063/S/WG (/SRO)	NI10063/S/WG (/SRO)	NI08083/S/WG (/SRO)	NI10083/S/WG (/SRO)	NI12083/S/WG (/SRO)
Rainhoods	316 stainless steel	NIRH021/S (SRO)▲	30	175.6	65	•																							
		NIRH031/S (SRO)▲	30	275.6	65		•		•																				
		NIRH032/S (SRO)▲	30	275.6	105					•																			
		NIRH041/S▲ (SRO)▲	30	375.6	65			•																					
		NIRH042/S (SRO)▲	30	375.6	105						•	•	•	•															
		NIRH043/S (SRO)▲	30	375.6	220															•	•								
		NIRH052/S (SRO)▲	30	475.6	105										•														
		NIRH062/S (SRO)▲	30	575.6	105											•	•	•	•										
		NIRH063/S (SRO)▲	30	575.6	220																		•	•	•	•			
		NIRH082/S▲ (SRO)▲	30	775.6	105															•									
		NIRH083/S (SRO)▲	30	775.6	220																						•	•	•
External vent kits	316 stainless steel	IPVK/S	130	130	–	^	^	^	•	•	•	•	•	•	•	•	•	•	•	•	•	•	•	•	•	•	•	•	•
		IPVK/SRO▲	130	130	–	^	^	^	•	•	•	•	•	•	•	•	•	•	•	•	•	•	•	•	•	•	•	•	•
		IPVK16/S▲	260	260	–	^	^	^	^	^	^	^	^	^	^	^	^	^	^	^	•	•	•	•	•	•	•	•	•
		IPVK16/SRO▲	260	260	–	^	^	^	^	^	^	^	^	^	^	^	^	^	^	^	•	•	•	•	•	•	•	•	•
Wall mounting brackets – 316 stainless steel	Set of 4	MEB/S	–	–	–	•	•	•	•	•	•	•	•	•	•		•	•		•		•		•	•	•	•	•	•
Mounting flange kits	316 stainless steel	MF2/S▲	75	200	–	•																							
		MF3/S	75	300	–		•		•	•																			
		MF4/S	75	400	–			•			•	•	•	•							•	•							
		MF5/S▲	75	500	–										•														
		MF6/S▲	75	600	–											•	•	•	•				•	•	•	•			
		MF8/S▲	75	800	–															•							•	•	•
Mounting Pan		NIMP0302	250	150	–	•																							
		NIMP0303	250	250	–		•																						
		NIMP0403	350	250	–				•	•																			
		NIMP0304	250	350	–			•			•																		
		NIMP0404	350	350	–							•									•								
		NIMP0504	450	350	–								•																
		NIMP0604	550	350	–									•								•							
		NIMP0505	450	450	–										•														
		NIMP0406	350	550	–											•							•						
		NIMP0606	550	550	–												•							•					
		NIMP0806	750	550	–													•							•				
		NIMP1006	950	550	–														•							•			
		NIMP0808	750	750	–																						•		
		NIMP1008	950	750	–															•								•	
		NIMP1208	1150	750	–																								•
Replacement Hinge	Kit	NI/H	–	–	–	•	•	•	•	•	•	•	•	•	•	•	•	•	•	•	•	•	•	•	•	•	•	•	•

^ Fits door only
▲ Available on request

Locks

To suit Forte FR and Universal NI enclosures

STANDARD LOCKS

Enclosure	Stl	SS
Universal NI	NI020 – chromed steel with 7mm square insert.	NI020/S – stainless steel lock with 7mm square stainless steel insert.

LOCK OPTIONS

There are a number of additional lock options available that are suitable for use on Universal NI enclosures.

Product	Description	Part Number	Standard Lock/Insert	Alternative insert	Keys: Lockable handles	Keys: Aluminium, 4-way
Turnbuckle	chromed steel	NI020	7mm square – steel	See below		SKZ
	powdercoated	NI020/PS	7mm square – stainless steel	See below		SKZ
	stainless steel	NI020/S	7mm square – stainless steel	See below		SKZ
		NI028/S	8mm square slotted – stainless steel	See below		SK8
Wing knob	lockable	NI030	Key code 92268		SK3	
	non-lockable	NI111	–			
T-handle	lockable	NI040	Key code 92268		SK3	
L-handle	lockable	NI050	Key code 92268		SK3	
	padlockable – steel	NI052	–			
	padlockable – stainless steel	NI052/S	–			
Dust cap	plastic	NI020/DC	to suit NI020 lock			

020

020/PS

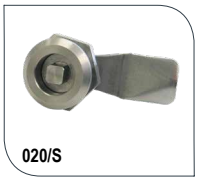
020/S

028S/S

030

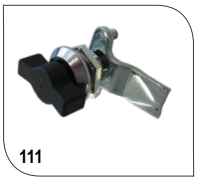
111

040

050

052

052/S

NI020/DC

LOCK INSERTS FOR NI020 LOCKS

The NI020 locks are available with an optional lock insert. Contact your local B&R sales representative to discuss your requirements.

To suit lock style	Description	To suit lock	3mm double bit pin: Steel	3mm double bit pin: Stainless Steel	8mm square: Steel	8mm square: Stainless Steel	Stainless Steel	8mm triangle: Steel	8mm triangle: Stainless Steel
Turnbuckle	chromed steel	NI020	LKINS3P		LKINS8S		LKINS8SS/S	LKIN8T	
	powdercoated with SS insert	NI020/PS		LKINS3P/S		LKINS8S/S	LKINS8SS/S		LKINS8T/S
	stainless steel	NI020/S		LKINS3P/S		LKINS8S/S	LKINS8SS/S		LKINS8T/S
Key required – zinc			SKZ	SKZ	SK8	SK8	SK8	SKZ	SKZ

Project Profile

BHP Olympic Dam, South Australia

THE PROJECT

Olympic Dam mine is a large polymetallic mine located in South Australia, approximately 550km Northwest of Adelaide.

Home to a major source of oxide copper gold deposit, Olympic Dam produces combined quantities of Copper, Gold, Uranium and Silver through an underground mining system integrated with a metallurgical processing plant.

The deposit was discovered in 1975 and the mine was opened in 1988 by WMC Resources. BHP gained control of this mine in mid-2005.

THE CONTRACTOR

MPS Building & Electrical, a local contractor based in Roxby Downs, provide a wide range of domestic, commercial and industrial mining services to the Roxby Downs community and surrounding areas.

THE CHALLENGE

MPS contacted B&R to assist with finding a solution for a fibre enclosure hub which would be used to link a fibre ring underground connecting four mine shafts, with the surface.

B&R's design and engineering team worked closely with MPS Building & Electrical to create an enclosure specific to BHP's requirements. The customised solution was supplied through Auslec Electrical and Data located in Wingfield.

THE SOLUTION

B&R designed a double door stainless steel field cabinet which was 1000mm deep and capable of housing electrical and monitoring equipment.

Due to the remote location of the project and the type of equipment installed, sunshades and lockable handles were included to reduce heat within the enclosure and prevent vandalism.

THE RESULT

B&R have worked alongside BHP and MPS Building & Electrical on past projects, installing enclosure solutions into a variety of different applications.

B&R's ability to design custom solutions along with their reliable service meant MPS Building & Electrical could confidently deliver this project and supply an enclosure suitable for harsh mining environments.

B&R and MPS look forward to working together again. This enclosure was specifically designed for this project and is being considered as a standard for future installations.

> "B&R were able to design and supply an enclosure that was 100% fit-for-purpose, which made for a seamless installation."

Connector TE – Zinc Coated Steel

Termination Enclosures

- Suitable for housing terminations, push buttons or switchgear in industrial or demanding environments.
- Designed for installations where smaller enclosures are required.
- Captive 316 stainless steel combo head screws, used to prevent loss when fastening.
- Provision for mounting DIN rails or a mounting pan, increasing application flexibility.
- Conformity, Approvals:
  Lloyds Register #06/10007 (E2)
- Manufactured from 1.2mm zinc coated steel.
- Powdercoated Pebble Grey RAL7032.

Comes standard with:

- Earth strap kit

TE2212

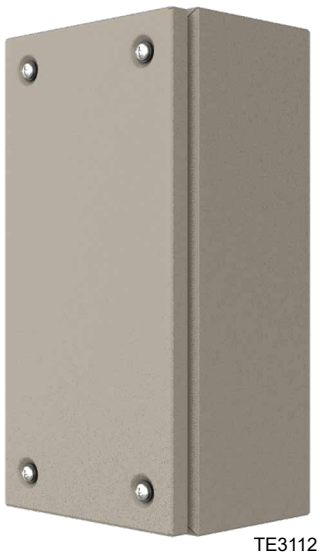

TE3112

ORDERING GUIDE

	Dimensions (mm)							
	External			Useable Depth		Opening Size		
Part Number	Height (A)	Width (B)	Depth (C)	With DIN Rail*	With Mounting Pan*	Height (D)	Width (E)	Weight (kg)
TE1108	150	150	80	47	60	125	125	1.2
TE3112	300	150	120	87	100	275	125	2.4
TE2212	200	200	120	87	100	175	175	2.2
TE3212	300	200	120	87	100	275	175	2.9
TE4212	400	200	120	87	100	375	175	3.6
TE6212	600	200	120	87	100	575	175	4.9

* Mounting pan and DIN rail are available as optional extra

TECHNICAL DRAWINGS

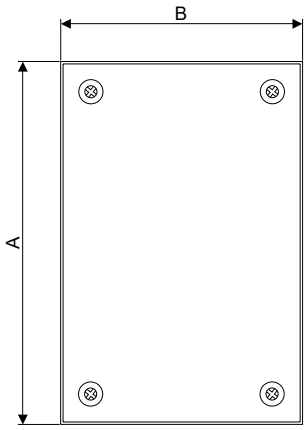

Front View

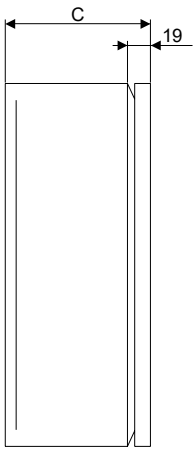

Side View

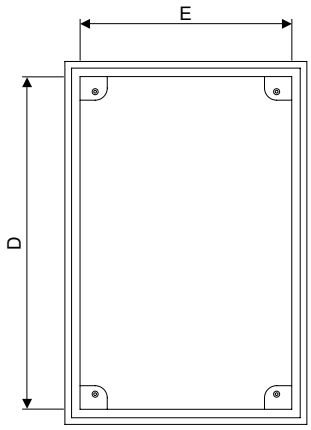

Front View
(Lid Removed)

ACCESSORIES

Product	Description	Part Number	Dimensions (mm) Height	Dimensions (mm) Width	TE1108	TE3112	TE2212	TE3212	TE4212	TE6212
Mounting pan – metal (powdercoated white)	2mm	TEMP11	123	120	•					
		TEMP22	173	170			•			
		TEMP31	273	120		•				
		TEMP32	273	170				•		
		TEMP42	373	170					•	
		TEMP62	573	170						•
DIN Rail	Aluminium	TED1	140	35	•					
		TED2	190	35			•			
		TED3	290	35		•		•		
		TED4	390	35					•	
		TED6	590	35						•
Wall mounting brackets – 316 stainless steel	Set of 4 (1 Tonne SWL)	MEB/S	–	–	•	•	•	•	•	•
Touch up paint (300g)	Pebble Grey RAL7032	TUP/P20	–	–	•	•	•	•	•	•

TEMP22

TED2

MEB/S - Set of 4

Connector TE – 316 Stainless Steel

Termination Enclosures

- Suitable for housing terminations, pushbuttons or switchgear in industrial or demanding environments.
- Designed for installations where smaller enclosures are required.
- Captive 316 stainless steel combo head screws, used to prevent loss when fastening.
- Provision for mounting DIN rails or a mounting pan, increasing application flexibility.
- Conformity, Approvals:
  Lloyds Register #06/10007 (E2)
- Manufactured from 1.2mm 316 stainless steel.
- Powdercoated N4 surface finish.

Comes standard with:

- Earth strap kit

TE1108/S TE3112S

ORDERING GUIDE

	Dimensions (mm)							
	External			Useable Depth		Opening Size		
Part Number	Height (A)	Width (B)	Depth (C)	With DIN Rail*	With Mounting Pan*	Height (D)	Width (E)	Weight (kg)
TE1108/S	150	150	80	47	60	125	125	1.2
TE3112/S	300	150	120	87	100	275	125	2.4
TE2212/S	200	200	120	87	100	175	175	2.2
TE3212/S	300	200	120	87	100	275	175	2.9
TE4212/S	400	200	120	87	100	375	175	3.6
TE6212/S	600	200	120	87	100	575	175	4.9

* Mounting pan and DIN rail are available as optional extra

TECHNICAL DRAWINGS

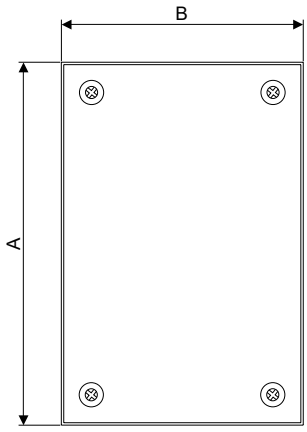

Front View

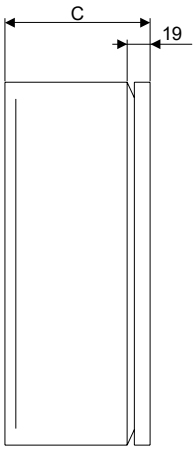

Side View

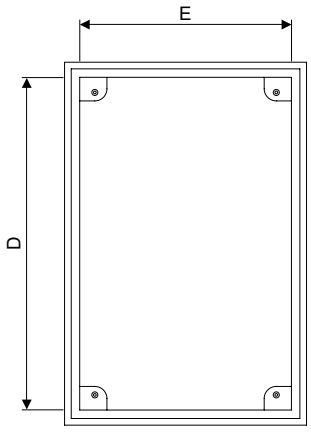

Front View
(Lid Removed)

ACCESSORIES

Product	Description	Part Number	Dimensions (mm) Height	Dimensions (mm) Width	TE1108/S	TE3112/S	TE2212/S	TE3212/S	TE4212/S	TE6212/S
Mounting pan – 2mm (powdercoated white)	Metal	TEMP11	123	120	•					
		TEMP22	173	170			•			
		TEMP31	273	120		•				
		TEMP32	273	170				•		
		TEMP42	373	170					•	
		TEMP62	573	170						•
DIN Rail	Aluminium	TED1	140	35	•					
		TED2	190	35			•			
		TED3	290	35		•		•		
		TED4	390	35					•	
		TED6	590	35						•
Wall mounting brackets – 316 stainless steel	Set of 4 (1 Tonne SWL)	MEB/S	–	–	•	•	•	•	•	•

TEMP22

TED2

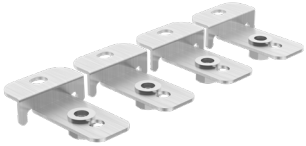

MEB/S - Set of 4

Connector TEMF

Termination Enclosures with Mounting Flanges

- Suitable for housing terminations, pushbuttons or switchgear in industrial or demanding environments.
- Designed for applications where a smaller enclosure is required.
- Captive 316 stainless steel combo head screws to prevent loss when fastening.
- Provision for mounting DIN rails or a mounting pan, increasing application flexibility.
- Conformity, Approvals:
  Lloyds Register #06/10007 (E2)
- Region D wind rated to AS1170.2-2002: Structural design actions - Wind actions
- Manufactured from 1.2mm 316 stainless steel.
- N4 surface finish.

Comes standard with:

- Earth strap kit

TE2212MF/S

ORDERING GUIDE

	Dimensions (mm)									
	External			Useable Depth		Mounting Centres		Opening		
Part Number	Height (A)	Width (B)	Depth (C)	With DIN Rail*	With Mounting Pan*	Height (D)	Width (E)	Height (F)	Width (G)	Weight (kg)
TE1108MF/S	150	150	80	47	60	175	100	125	125	1.4
TE3112MF/S	300	150	120	87	100	325	100	275	125	2.6
TE2212MF/S	200	200	120	87	100	225	150	175	175	2.4
TE3212MF/S	300	200	120	87	100	325	150	275	175	3.1
TE4212MF/S	400	200	120	87	100	425	150	375	175	3.8
TE6212MF/S▲	600	200	120	87	100	625	150	575	175	5.0

* Mounting pan and DIN rail are an optional extra
▲ Available on request

TECHNICAL DRAWINGS

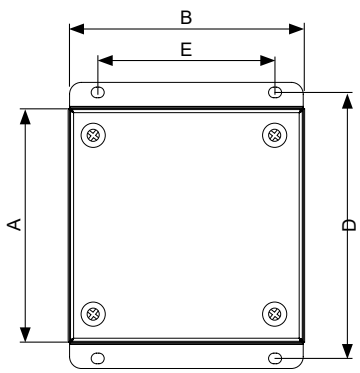

Front View

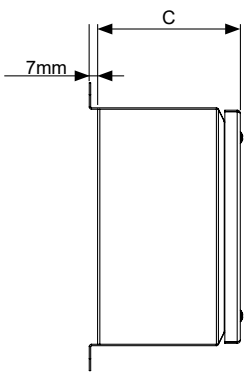

Side View

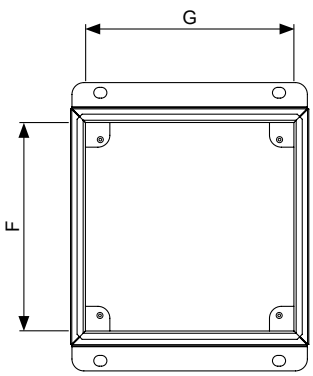

Front View
(Lid Removed)

ACCESSORIES

Product	Description	Part Number	Dimensions (mm) Height	Dimensions (mm) Width	TE1108MF/S	TE3112MF/S	TE2212MF/S	TE3212MF/S	TE4212MF/S	TE6212MF/S
Mounting pan – 2mm (powdercoated white)	Metal	TEMP11	123	120	•					
		TEMP22	173	170			•			
		TEMP31	273	120		•				
		TEMP32	273	170				•		
		TEMP42	373	170					•	
		TEMP62	573	170						•
DIN Rail	Aluminium	TED1	140	35	•					
		TED2	190	35			•			
		TED3	290	35		•		•		
		TED4	390	35					•	
		TED6	590	35						•

TEMP22

TED2

Control Stations - Stainless Steel

Pushbutton Enclosures with Mounting Flanges

- Designed to house pushbuttons in heavy duty industrial or harsh and demanding environments.
- Suitable for applications where an IP66 protection rating is required*
- Mounting flanges for ease of installation.
- Available with or without cut outs.
- Cut outs available as 22.5mm or 30.8mm.
- Up to 9 cut outs, dependent on enclosure size.
- Range of pushbuttons able to be fitted as part of the order.
- Earth stud included internally.
- Manufactured from 1.5mm 316 stainless steel with N4 surface finish.

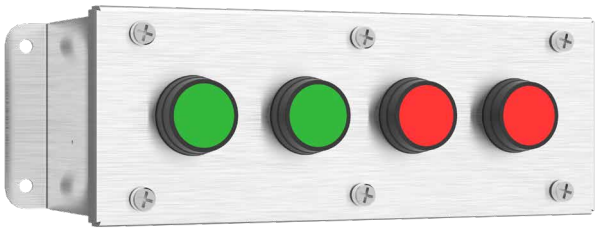

CS13/SH30

*IP66 rating applies when fitted with appropriate IP rated pushbuttons or plug

ORDERING GUIDE

	Dimensions (mm)										
	External			Internal	Mounting Centres		Body				
Part Number	Height (A)	Width (B)	Depth (C)	Useable Depth (D)	Height (E)	Width (F)	Height (G)	Width (H)	Push Button Cut Outs	Cable Entries	Weight (kg)
CS11/S	152	97	93	90	132	67	112	90	–	–	1.1
CS12/S	199	97	93	90	179	67	159	90	–	–	1.5
CS13/S	245	97	93	90	225	67	205	90	–	–	1.8
CS14/S	290	97	93	90	270	67	250	90	–	–	2.0
CS16/S	383	97	93	90	363	67	343	90	–	–	2.7
CS11/SH22	152	97	93	90	132	67	112	90	1 x 22mm	1 x M20	1.1
CS12/SH22	199	97	93	90	179	67	159	90	2 x 22mm	1 x M20	1.5
CS13/SH22	245	97	93	90	225	67	205	90	3 x 22mm	1 x M25	1.8
CS14/SH22	290	97	93	90	270	67	250	90	4 x 22mm	1 x M25	2.0
CS16/SH22	383	97	93	90	363	67	343	90	6 x 22mm	1 x M25	2.7
CS33/SH22	245	272	93	90	225	197	205	90	9 x 22mm	2 x M25	3
CS11/SH30	152	97	93	90	132	67	112	90	1 x 30mm	1 x M20	1.1
CS12/SH30	199	97	93	90	179	67	159	9	2 x 30mm	1 x M20	1.5
CS13/SH30	245	97	93	90	225	67	205	265	3 x 30mm	1 x M25	1.8
CS14/SH30	290	97	93	90	270	67	250	90	4 x 30mm	1 x M25	2.0
CS16/SH30	383	97	93	90	363	67	343	90	6 x 30mm	1 x M25	2.7
CS33/SH30	245	272	93	90	225	197	205	265	9 x 30mm	2 x M25	3

Assembled product solution - dust cover (CSDC33/S), control station (CS33/SH30) and plug (CSP30/S)

CSDC33/S

CS33/SH30

CSP30/S

Control Stations - Stainless Steel

Pushbutton Enclosures with Mounting Flanges

TECHNICAL DRAWINGS

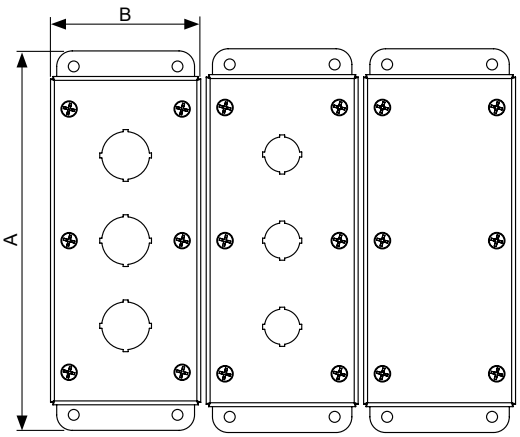

Front View

30mm Cut Outs 22mm Cut Outs No Cut Outs

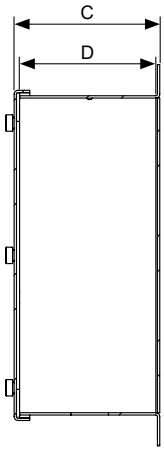

Side View

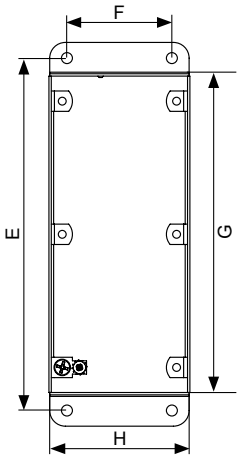

Front View
(Lid Removed)

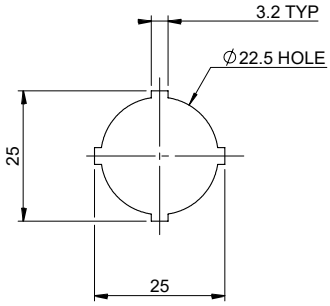

22.5mm cut out

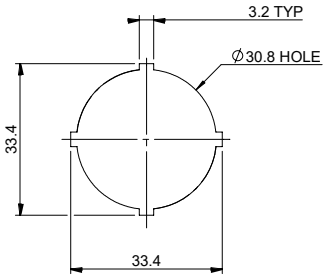

30mm cut out

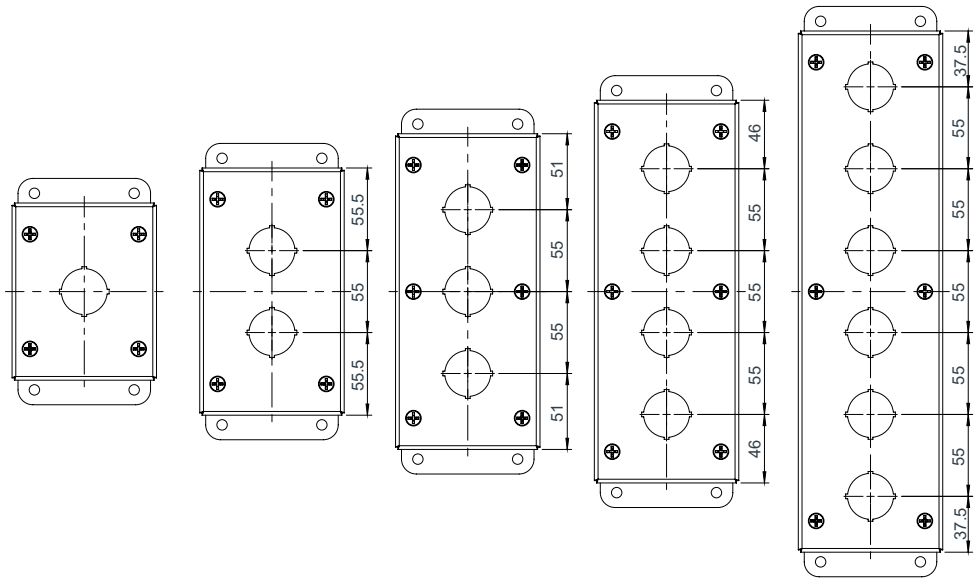

ACCESSORIES

Part Number	Product	Dimensions (mm) Height	Width	Depth	Weight (kg)
CSDC1-6/S	Dust cover suitable for CS1*	400	170	145	2.9
CSDC33/S	Dust cover suitable for CS3*	400	310	165	3.8
CSP22/S	M22 Plug	–	–	–	–
CSP30/S	M30 Plug	–	–	–	–

Universal DD – Zinc Coated Steel

Double Door Enclosures

- Suitable for industrial or demanding conditions.
- No centre mullion — extremely easy to access all equipment mounted on the included mounting pan.
- 180º opening doors.
- Conformity, Approvals:
  Lloyds Register #06/10007 (E2)
- Manufactured from 1.6mm zinc coated steel.
- Powdercoated Pebble Grey RAL7032.

Comes standard with:

- 2mm steel mounting pan powdercoated white
- Gland plates fitted internally or externally – dual on 1200mm wide
- Door rails
- Chromed steel lock with 7mm square steel insert (DD020) on units below 1600mm high
- Lockable L handle keyed to 92268 (DD050) on units 1600mm and above
- Earth strap kit

ORDERING GUIDE

	Dimensions (mm)									
	External			Internal	Mounting Pan		Opening			
Part Number	Height (A)	Width (B)	Depth (C)	Usable Depth* (D)	Height (E)	Width (F)	Height (G)	Width (H)	No. of Gland Plates	Weight (kg)
DD10103▲	1000	1000	300	250	940	915	940	920	1	67.0
DD12103	1200	1000	300	250	1140	915	1140	920	1	78.0
DD16104▲	1600	1000	400	350	1540	915	1540	920	1	108.0
DD18104	1800	1000	400	350	1740	915	1740	920	1	119.0
DD20104▲	2000	1000	400	350	1940	915	1940	920	1	131.0
DD12124	1200	1200	400	350	1140	1115	1140	1120	2	98.0
DD16124	1600	1200	400	350	1540	1115	1540	1120	2	125.0
DD18124	1800	1200	400	350	1740	1115	1740	1120	2	138.0
DD20124	2000	1200	400	350	1940	1115	1940	1120	2	152.0
DD18125▲	1800	1200	500	450	1740	1115	1740	1120	2	147.0
DD20125	2000	1200	500	450	1940	1115	1940	1120	2	161.0

* Mounting pan to inside of door
▲ Available on request

Universal DD – Zinc Coated Steel

Double Door Enclosures

ACCESSORIES

Product	Description	Part Number	Dimensions (mm) Height	Width	Depth	DD10103	DD12103	DD16104	DD18104	DD20104	DD12124	DD16124	DD18124	DD20124	DD18125	DD20125
Rainhoods	Zinc coated steel	DDRH103▲	30	–	–	•	•									
		DDRH104▲	30	–	–			•	•	•						
		DDRH124▲	30	–	–						•	•	•	•		
		DDRH125▲	30	–	–										•	•
Channel iron plinths	Galvanised steel	DDCIP103▲	75	1000	255	•	•									
		DDCIP104▲	75	1000	355			•	•	•						
		DDCIP124	75	1200	355						•	•	•	•		
		DDCIP125▲	75	1200	455										•	•
Plinth mounting bases	Galvanised steel	DDPB011003▲	100	1000	255	•	•									
		DDPB011004	100	1000	355			•	•	•						
		DDPB011204▲	100	1200	355						•	•	•	•		
		DDPB011205▲	100	1200	455										•	•
Neoprene gasket	3mm x 20mm, 4m long	IPPC/G	–	–	–	•	•	•	•	•	•	•	•	•	•	•
External vent kit (Pebble Grey RAL7032)	Zinc coated steel	IPVK	130	130	–	•	•	•	•	•	•	•	•	•	•	•
		IPVK16	260	260	–	•	•	•	•	•	•	•	•	•	•	•
Gland plate – split	2mm zinc coated steel	DDSGP▲	490	112	–	•	•	•	•	•	•	•	•	•	•	•
Eye bolt	125kg per bolt (2)	LEB/12	–	–	–	•	•	•	•	•	•	•	•	•	•	•
LED light kit (500mm wide) – includes power supply & switch	12V	BRLED500	–	500	–	•	•	•	•	•	•	•	•	•	•	•
	24V	BRLED500/24	–	500	–	•	•	•	•	•	•	•	•	•	•	•
Light kit bracket	To suit LED light kit	DDLKB10▲	–	1000	–	•	•	•	•	•	•	•	•	•	•	•
		DDLKB12▲	–	1000	–	•	•	•	•	•	•	•	•	•	•	•
Fluoro light kit (240V)	1000mm wide	DDLTK10▲	–	–	–	•	•	•	•	•						
	1200mm wide	DDLTK12▲	–	–	–						•	•	•	•	•	•
Touch up paint (300g)	Pebble Grey RAL7032	TUP/P20	–	–	–	•	•	•	•	•	•	•	•	•	•	•

▲ Available on request

TECHNICAL DRAWING

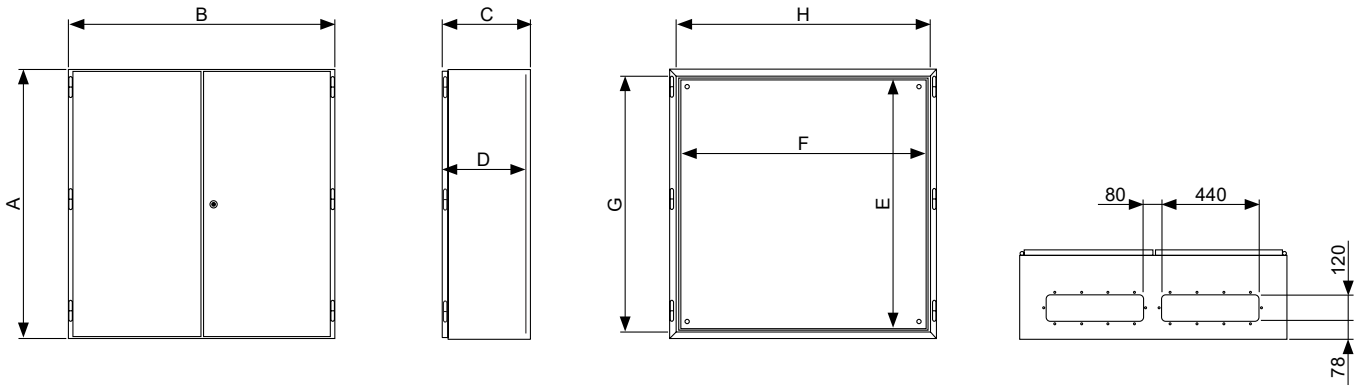

Front View

Side View

Front View
(Door Removed)

Bottom View

Universal DD – 316 Stainless Steel

Double Door Enclosures

- Suitable for industrial or demanding conditions.
- No centre mullion — extremely easy to access all equipment mounted on the included mounting pan.
- 180º opening doors.
- Conformity, Approvals:
  Lloyds Register #06/10007 (E2)
- Manufactured from 1.5mm 316 stainless steel.
- N4 surface finish.

Comes standard with:

- 2mm steel mounting pan powdercoated white
- Gland plates fitted internally or externally – dual on 1200mm wide
- Door rails
- Stainless steel lock with 7mm square stainless steel insert (DD020/S) on units below 1600mm high
- Lockable L handle keyed to 92268 (DD050) on units 1600mm and above
- Earth strap kit

ORDERING GUIDE

	Dimensions (mm)									
	External			Internal	Mounting Pan		Opening			
Part Number	Height (A)	Width (B)	Depth (C)	Usable Depth* (D)	Height (E)	Width (F)	Height (G)	Width (H)	No. of Gland Plates	Weight (kg)
DD10103/S▲	1000	1000	300	250	940	915	940	920	1	64.0
DD12103/S▲	1200	1000	300	250	1140	915	1140	920	1	74.0
DD16104/S▲	1600	1000	400	350	1540	915	1540	920	1	103.0
DD18104/S▲	1800	1000	400	350	1740	915	1740	920	1	114.0
DD20104/S▲	2000	1000	400	350	1940	915	1940	920	1	125.0
DD12124/S▲	1200	1200	400	350	1140	1115	1140	1120	2	93.0
DD16124/S	1600	1200	400	350	1540	1115	1540	1120	2	119.0
DD18124/S	1800	1200	400	350	1740	1115	1740	1120	2	132.0
DD20124/S▲	2000	1200	400	350	1940	1115	1940	1120	2	145.0
DD18125/S	1800	1200	500	450	1740	1115	1740	1120	2	140.0
DD20125/S▲	2000	1200	500	450	1940	1115	1940	1120	2	154.0

* Mounting pan to inside of door
▲ Available on request

Universal DD – 316 Stainless Steel

Double Door Enclosures

ACCESSORIES

Product	Description	Part Number	Dimensions (mm) Height	Width	Depth	DD10103/S	DD12103/S	DD16104/S	DD18104/S	DD20104/S	DD12124/S	DD16124/S	DD18124/S	DD20124/S	DD18125/S	DD20125/S
Rainhoods	316 stainless steel	DDRH103/S▲	30	–	–	•	•									
		DDRH104/S▲	30	–	–			•	•	•						
		DDRH124/S▲	30	–	–						•	•	•	•		
		DDRH125/S▲	30	–	–										•	•
Channel iron plinths	Galvanised steel	DDCIP103▲	75	1000	255	•	•									
		DDCIP104▲	75	1000	355			•	•	•						
		DDCIP124	75	1200	355						•	•	•	•		
		DDCIP125▲	75	1200	455										•	•
Plinth mounting bases	Galvanised steel	DDPB011003▲	100	1000	255	•	•									
		DDPB011004	100	1000	355			•	•	•						
		DDPB011204▲	100	1200	355						•	•	•	•		
		DDPB011205▲	100	1200	455										•	•
Neoprene gasket	3mm x 20mm, 4m long	IPPC/G	–	–	–	•	•	•	•	•	•	•	•	•	•	•
External vent kit	316 stainless steel	IPVK/S	130	130	–	•	•	•	•	•	•	•	•	•	•	•
		IPVK16/S▲	260	260	–	•	•	•	•	•	•	•	•	•	•	•
Gland plate – split	2mm zinc coated steel	DDSGP▲	490	112	–	•	•	•	•	•	•	•	•	•	•	•
Eye bolt	125kg per bolt (2)	LEB/12	–	–	–	•	•	•	•	•	•	•	•	•	•	•
LED light kit (500mm wide) – includes power supply & switch	12V	BRLED500	–	500	–	•	•	•	•	•	•	•	•	•	•	•
	24V	BRLED500/24	–	500	–	•	•	•	•	•	•	•	•	•	•	•
Light kit bracket	To suit LED light kit	DDLKB10▲	–	1000	–	•	•	•	•	•	•	•	•	•	•	•
		DDLKB12▲	–	1000	–	•	•	•	•	•	•	•	•	•	•	•
Fluoro light kit (240V)	1000mm wide	DDLTK10▲	–	–	–	•	•	•	•	•						
	1200mm wide	DDLTK12▲	–	–	–						•	•	•	•	•	•

▲ Available on request

TECHNICAL DRAWING

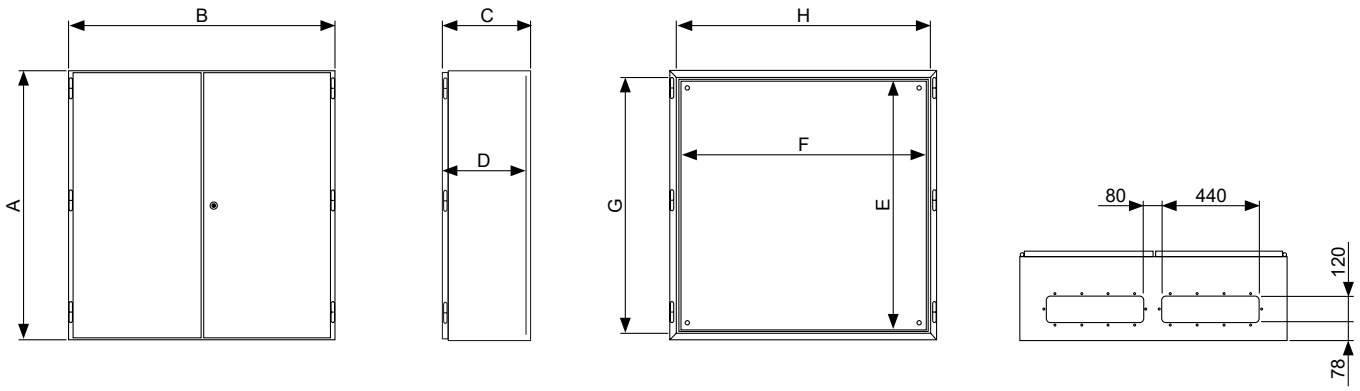

Front View

Side View

Front View
(Door Removed)

Bottom View

Incline SR

Mining and Industrial Enclosures

- Designed for rugged industrial applications including local control stations, mini control consoles or motor isolators.
- Suitable for mine sites and sugar mills.
- 30º sloping roof and 20mm overhang to prevent build up of solids.
- Specially designed gutter system.
- Conformity, Approvals:
  Lloyds Register #06/10007 (E2)
- Region D wind rated to AS1170.2-2002: Structural design actions - Wind actions
- Manufactured from 1.5mm 316 stainless steel.
- N4 surface finish or powdercoated X15 orange.

Comes standard with:

- 2mm steel mounting pan powdercoated white
- Stainless steel gland plate
- Mounting flanges top & bottom
- Stainless steel lock with 7mm square stainless steel insert (NI020/S)
- Door rails
- Earth strap kit

ORDERING GUIDE

Part Number		Dimensions (mm)												
		External				Internal	Mounting Pan		Gland Opening		Mounting Centres			
Standard	X15 Orange	Height (A)	Width (B)	Depth (C)	Total Height (D)**	Usable Depth*(E)	Height (F)	Width (G)	Width (H)	Depth (I)	Height (J)	Width (K)	Weight (kg)	No. of Locks
SR03021/S	SR03021/SRO▲	300	200	150	507	140	250	150	175	70	477	100	5.5	1
SR04031/S	SR04031/SRO▲	400	300	150	607	140	350	250	175	70	577	200	9	1
SR03042/S◊	SR03042/SRO▲	300	400	200	536	190	250	350	250	120	506	300	10	1
SR04042/S◊	SR04042/SRO▲	400	400	200	636	190	350	350	250	120	606	300	13	1
SR06042/S◊	SR06042/SRO▲	600	400	200	836	190	550	350	250	120	806	300	17	1
SR04062/S◊	SR04062/SRO▲	400	600	200	636	190	350	550	440	120	606	500	18	1
SR08062/S◊	SR08062/SRO▲	800	600	200	1036	190	750	550	440	120	1006	500	31	2
SR10062/S◊	SR10062/SRO▲	1000	600	200	1236	190	950	550	440	120	1206	500	37	2
SR04063/S◊	SR04063/SRO▲	400	600	300	694	290	350	550	440	120	663	500	21	1
SR06063/S◊	SR06063/SRO▲	600	600	300	894	290	550	550	440	120	863	500	28	1
SR08063/S^	SR08063/SRO▲^	800	600	300	1094	290	750	550	440	120	1063	500	35	2

▲ Available on request
* Mounting pan to inside of door
** Includes from bottom of enclosures to top mounting flange
◊ Includes vertical door rails
^ Includes horizontal and vertical door rails

ACCESSORIES

Product	Description	Part Number	Dimensions (mm) Height	Width	Thickness	SR03021/S (/SRO)	SR04031/S (/SRO)	SR03042/S (/SRO)	SR04042/S (/SRO)	SR06042/S (/SRO)	SR04062/S (/SRO)	SR08062/S (/SRO)	SR10062/S (/SRO)	SR04063/S (/SRO)	SR06063/S (/SRO)	SR08063/S (/SRO)
Mounting pan	Insulated	SRIMP032	250	150	6	•										
		SRIMP034	250	350	6		•	•								
		SRIMP044	350	350	6				•							
		SRIMP046▲	350	550	6						•			•		
		SRIMP064	550	350	6					•						
		SRIMP066	550	550	6										•	
		SRIMP086▲	750	550	6							•				•
		SRIMP106▲	950	550	6								•			
Gland plate	Brass	SRBGP3/1	195	100	3	•	•									
		SRBGP3/2	290	160	3			•	•	•						
		SRBGP3/3	480	160	3						•	•	•	•	•	•
		SRBGP6/1	195	100	6	•	•									
		SRBGP6/2	290	160	6			•	•	•						
		SRBGP6/3	480	160	6						•	•	•	•	•	•
	316 stainless steel	SRSGP/1	195	100	1.5	•	•									
		SRSGP/2▲	290	160	1.5			•	•	•						
		SRSGP/3▲	480	160	1.5						•	•	•	•	•	•
	Aluminium	SRAGP6/1	195	100	6	•	•									
		SRAGP6/2	290	160	6			•	•	•						
		SRAGP6/3	480	160	6						•	•	•	•	•	•
External vent kit	316 stainless steel	IPVK/S	130	130	–	•	•	•	•	•	•	•	•	•	•	•
		IPVK/SRO▲	130	130	–	•	•	•	•	•	•	•	•	•	•	•
		IPVK16/S▲	260	260	–	^	^	^	^	^	^	^	^	•	•	•
		IPVK16/SRO▲	260	260	–	^	^	^	^	^	^	^	^	•	•	•
Replacement hinge	Kit	NI/H	–	–	–	•	•	•	•	•	•	•	•	•	•	•
Touch up paint (150g)	X15 Orange	TUP/P24	–	–	–	•	•	•	•	•	•	•	•	•	•	•

^ Fits door only
▲ Available on request

TECHNICAL DRAWING

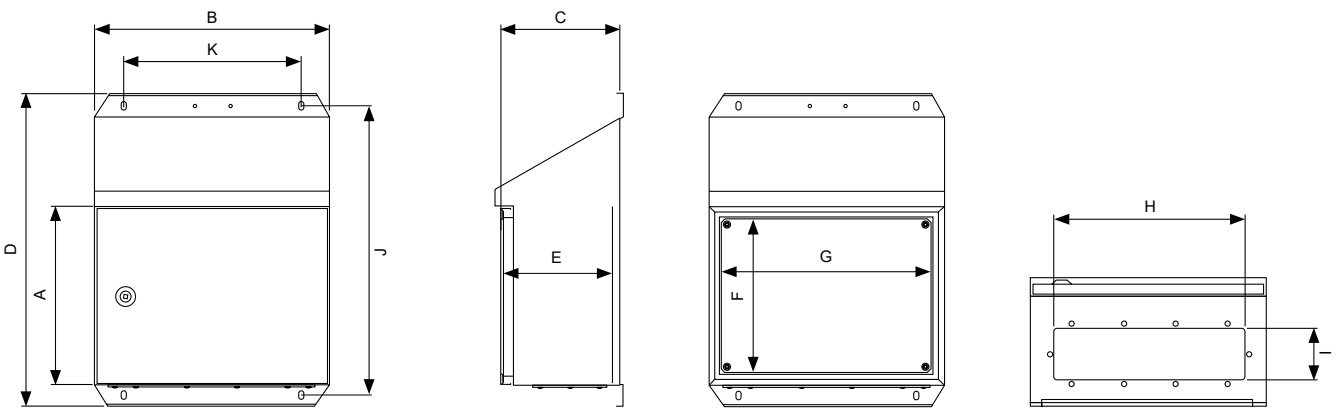

Front View | Side View | Front View (Door Removed) | Bottom View

Hedland PH

Mining and Industrial Enclosures

- Typically used for local control stations, mini-control consoles and motor isolators in conveyor runs.
- The sloped face creates an ergonomic interface when fitted with pushbuttons and control equipment.
- 15º sloping roof and 20mm overhang to prevent build up of solids.
- Conformity, Approvals:
  Lloyds Register #06/10007 (E2)
- Manufactured from 1.5mm 316 stainless steel
- N4 surface finish.

Comes standard with:

- 2mm steel mounting pan powdercoated white
- 6mm brass gland plate
- Top and bottom mounting flanges
- Stainless steel lock with 7mm square stainless steel insert (NI020/S)
- Door stay and document holder
- External earthing stud
- Earth strap kit

ORDERING GUIDE

	Dimensions (mm)											
	External				Internal	Mounting Pan		Gland Opening		Mounting Centres		
Part Number	Height (A)	Width (B)	Depth (C)	Total Height (D)	Useable Depth (E)*	Height (F)	Width (G)	Width (H)	Depth (I)	Height (J)	Width (K)	Weight (kg)
PH040427/S	400	400	270	603	230	320	340	180	300	563	300	23.0
PH060627/S	600	600	270	803	230	520	540	180	500	763	500	38.0
PH100827/S▲	1000	800	270	1203	230	915	740	180	700	1163	700	85.0
PH120827/S▲	1200	800	270	1403	230	1120	740	180	700	1363	700	95.0
PH160827/S▲	1600	800	270	1803	230	1520	740	180	700	1763	700	105.0

* Mounting pan to inside of door
▲ Available on request

ACCESSORIES

			Dimensions (mm)							
Product	Description	Part Number	Height	Width	Thickness	PH040427/S	PH060627/S	PH100827/S	PH120827/S	PH160827/S
External vent kit	316 stainless steel	IPVK/S	130	130	–	•	•	•	•	•
		IPVK16/S▲	260	260	–	^	^	^	^	^

^ Fits door only
▲ Available on request

TECHNICAL DRAWINGS

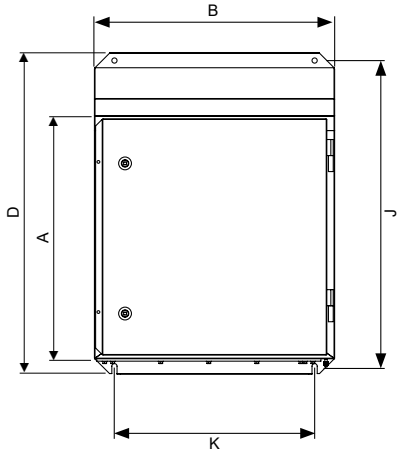

Front View

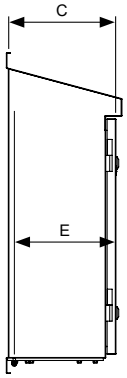

Side View

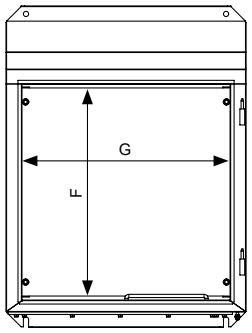

Front View
(Door Removed)

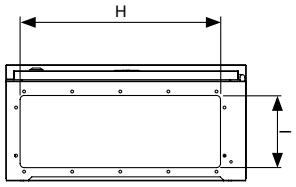

Bottom View

Finucane FI

Mining and Industrial Enclosures

INTERNAL ENCLOSURE

- 15º forward sloping roof with extended roof and gutter system.
- Mounting pan depth adjustable to provide flexibility for cable glands.
- 2mm steel mounting pan powdercoated white.
- 6mm aluminium gland plate.
- Door rails.
- Earth strap kit.
- Padlockable stainless steel swing handle (IP060/S).
- Manufactured from 316 stainless steel with N4 surface finish.

SUNSHADE ENCLOSURE

- Fully vented enclosure designed to protect enclosure from direct sunlight and reducing temperatures inside the enclosure.
- 15º reverse angle sloping roof.
- Large opening in bottom for maximum cable access and ventilation.
- Key lockable stainless steel L handle keyed to 92268 (IP050).
- Manufactured from 316 stainless steel with N4 surface finish.

FI151250/S Sunshade & enclosure - complete

ORDERING GUIDE

		Dimensions (mm)											
		External				Internal	Mounting Pan		Gland Opening		Mounting Centres		
Part Number	Includes	Height (A)	Width (B)	Depth (C)	Total Height (D)	Usable Depth (E)	Height (F)	Width (G)	Width (H)	Depth (I)	Height (J)	Width (K)	Weight (kg)
FI101040/S*	Internal enclosure only	1000	1000	420	1240	354	930	934	930	313	1206	900	65.0
FI151250/S	Sunshade and enclosure, complete	1500	1200	524	–	–	–	–	–	–	–	–	220.0

* Only applies to internal enclosure

FI101040/S

TECHNICAL DRAWINGS

Internal Enclosure

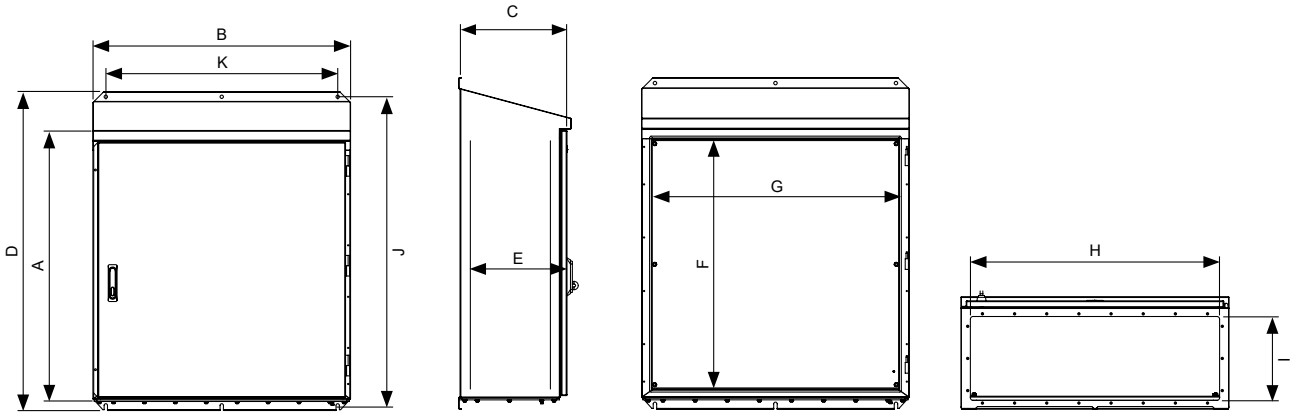

Front View | Side View | Front View (Door Removed) | Bottom View

Sunshade and enclosure complete assembly

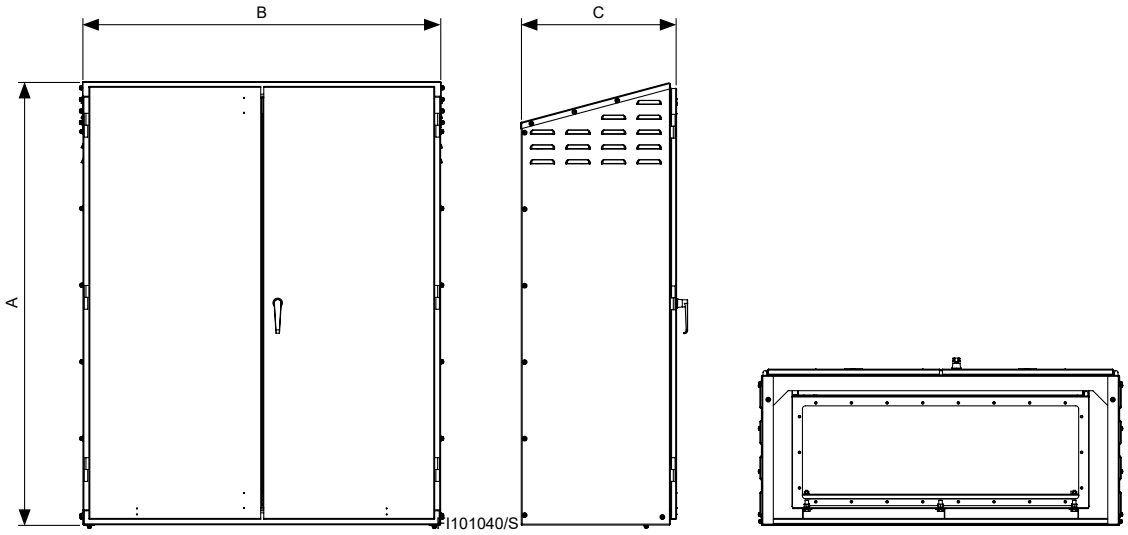

Front View | Side View | Bottom View

Miner ME

1000 Volt Mining and Industrial Enclosures

- Suitable for 1000 volt applications.
- 100 micron UV resistant modified polyester paint finish.
- Suitable for temperatures -10°C to +60°C.
- Specially designed flat faced gutter.
- External pintle hinges for easy door removal.
- Conformity, Approvals:
  Lloyds Register #06/10007 (E2)
- Manufactured from 2mm zinc coated steel.
- Powdercoated French Blue or X15 Orange.

Comes standard with:

- Steel mounting pan powdercoated white
- Chromed steel lock with 7mm square steel insert (NI020)
- Earth strap kit

ORDERING GUIDE

Part Number		Dimensions (mm)									
		External			Internal	Mounting Pan		Opening			
French Blue	X15 Orange	Height (A)	Width (B)	Depth (C)	Usable Depth* (D)	Height (E)	Width (F)	Height (G)	Width (H)	No. of Locks	Weight (kg)
ME06043	ME06043/RO▲	600	400	310	278	530	300	540	320	1	22.0
ME06063	ME06063/RO	600	600	310	278	530	500	540	520	1	30.0
ME08063	ME08063/RO	800	600	310	278	730	500	740	520	2	38.0
ME08083	ME08083/RO	800	800	310	278	730	700	740	720	2	49.0
ME10083	ME10083/RO▲	1000	800	310	278	930	700	940	720	2	59.0
ME12083▲	ME12083/RO▲	1200	800	310	278	1130	700	1140	720	2	69.0
ME10103	ME10103/RO	1000	1000	310	278	930	900	940	920	2	71.0

* Mounting pan to inside of door
▲ Available on request

TECHNICAL DRAWINGS

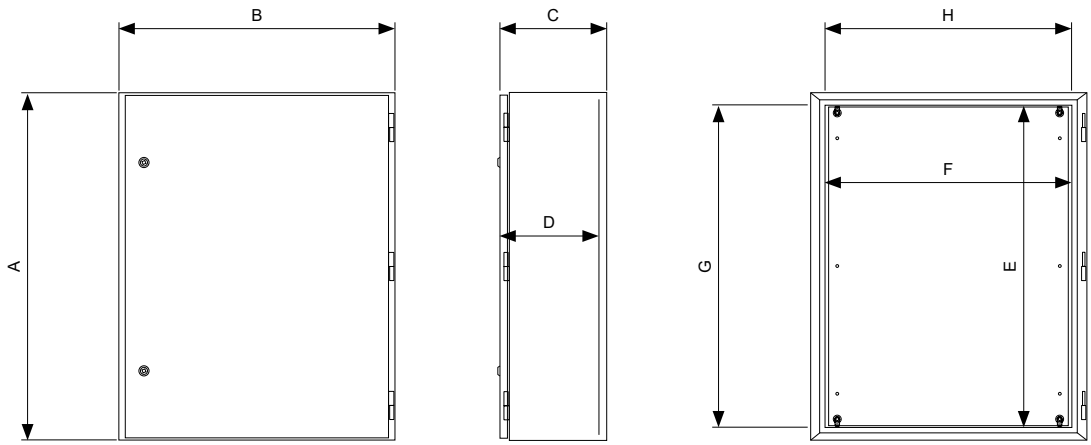

Front View | Side View | Front View (Door Removed)

Project Profile

Roy Hill Climate-Ready Enclosure Newman, WA

BHP wanted to create a fibre enclosure hub which would be used to link a fibre ring underground with the surface.

With a proven history designing and supplying enclosure solutions for heavy haul rail projects, B&R Enclosures were contracted to supply a range of 3mm aluminium rail cabinets.

This included single and double width control cabinets with full internal frames, post mount test switch boxes, post mount track disconnect boxes, single and double width battery cabinets with battery interconnection cables.

These cabinets were part of the project's satellite positioning based train control and protection technology including integrated electronic train order systems, centralised interlocking as well as communications-based protection of maintenance vehicles to be built by Samsung C&T for Ansaldo STS. This project drew on previous expertise and products supplied to the Rio Tinto AutoHaul project and RAFA. In addition, this project demanded adherence to a unique set of Roy Hill project requirements and specifications.

The cabinets were installed in the remote outback of Northern Western Australia where average ambient temperatures can be above fifty degrees in the dry season while monsoonal rain and cyclonic winds are prevalent in the wet season.

Combine this with the potential for vermin infestations and extreme dust infiltration, the cabinets needed to have technical approval and accreditation through rigorous testing and documentation protocol. At B&R's head office, located in Brisbane, the design team were able to utilise their in-house environmental testing facility to investigate the effects of structural certification, heat rise, humidity, wind load and ingress protection. A series of tests were conducted which included placing an operational cabinet within an environmental room where resistive heaters were used to simulate internal heat loads of between 500 and 2000 watts loss. A maximum 20K temperature difference was obtained through testing for an ambient temperature range of 272.4K to 323K and the abovementioned heat loads. Wind testing of the cabinets was simulated through applying a manual point force between 30 and 55 (kgf) to simulate a Region D, Level 4 wind load panels.

> "B&R worked closely with Ansaldo STS prior to and throughout the project to ensure successful delivery and long-term performance."

A particular point of difference was in B&R's proficiency to manufacture using aluminum. The advantages of using aluminum as an alternative to stainless steel or zinc coated steel included improved corrosion resistance, low density and excellent thermal conductivity for high exposure environments. The use of aluminum also lends to decreased costs in freight and general installation due to its lighter make-up.

A team of B&R design engineers worked closely with Ansaldo STS personnel to refine the cabinet solution ensuring the cabinet's integrity in sustained arduous environmental conditions. The comprehensive design research and testing conducted by B&R allowed Ansaldo STS to further qualify the project's successful delivery and long-term performance. Accordingly, B&R worked very closely with Ansaldo STS prior to and throughout the project time line - from early stage design, prototyping and testing through to final commissioning, completion and hand over.

Bowen Series

Mining and Industrial Enclosures

- Designed to house terminations, pushbuttons, isolators or switchgear in industrial or demanding environments such as washeries, processing and sampling stations.
- Is well suited to applications that require front and side mounted switching devices.
- 40º sloping roof and 40mm roof overhang reduces material build-up.
- Internal door rails fitted to ensure mounting flexibility.
- Lifting lugs conform to *AS4991:Lifting Devices*.
- One (1) tonne SWL on each lifting lug.
- Conformity, Approvals:
  Lloyds Register #06/10007 (E2)
- Manufactured from 1.5 to 2.0mm 316 stainless steel.
- N4 surface finish.

Comes standard with:

- Steel mounting pan powdercoated white
- Top and bottom mounting flanges
- Internal 6mm earth stud
- Lock dust cover with stainless steel lock with 8mm square slotted stainless steel insert
- Lifting lugs on 800mm & 1200mm high enclosures

ORDERING GUIDE

	Dimensions (mm)													
	External				Internal	Mounting Pan		Gland Opening		Mounting Centres		Material Thk.		
Part Number	Height (A)	Width (B)	Depth (C)	Total Height (D)	Usable Depth* (H)	Height (I)	Width (J)	Width (K)	Depth (L)	Height (M)	Width (N)	Body	Door	Weight (kg)
BL040320/S	400	300	200	709	179	345	210	200	105	676	200	1.5	1.5	14.0
BL040420/S	400	400	200	709	150	345	310	300	105	676	300	1.5	1.5	18.0
BL060420/S	600	400	200	909	150	545	310	300	105	876	300	1.5	1.5	21.0
BL060630/S	600	600	300	993	250	545	510	500	205	960	500	1.5	1.5	33.0
BL080630/S	800	600	300	1193	250	745	510	500	205	1160	500	1.5	1.5	60.0
BL120830/S	1200	800	300	1593	250	1145	710	700	205	1560	700	1.5	1.5	90.0
BW040320/S▲	400	300	200	710	179	345	210	200	105	676	200	2.0	2.0	17.0
BW040420/S	400	400	200	709	150	345	310	300	105	676	300	2.0	2.0	21.0
BW060420/S▲	600	400	200	909	150	545	310	300	105	876	300	2.0	2.0	28.0
BW060630/S▲	600	600	300	993	250	545	510	500	205	960	500	2.0	2.0	38.0
BW080630/S	800	600	300	1193	250	745	510	500	205	1160	500	2.0	2.0	70.0
BW120830/S	1200	800	300	1593	250	1145	710	700	205	1560	700	2.0	2.0	100.0

* Mounting pan to inside of door
▲ Available on request

ACCESSORIES

Product	Part Number	Dimensions (mm) Height	Width	Depth	BL040320/S	BL040420/S	BL060420/S	BL060630/S	BL080630/S	BL120830/S	BM040320/S	BM040420/S	BM060420/S	BM060630/S	BM080630/S	BM120830/S	BW040320/S	BW040420/S	BW060420/S	BW060630/S	BW080630/S	BW120830/S
Hinged escutcheon – 2mm zinc coated steel (white)	BWHE040420	300	312	200		•						•						•				
	BWHE060420	500	312	200			•						•						•			
	BWHE060630	500	507	300				•						•						•		
	BWHE080630	700	507	300					•						•						•	
	BWHE120830	1100	710	300						•						•						•
Light kit brackets^	BWLKB04▲	–	–	–		•	•					•	•					•	•			
	BWLKB06▲	–	–	–				•	•					•	•					•	•	
	BWLKB08▲	–	–	–						•						•						•
LED Light*	BRLED300	–	300	–		•	•					•	•					•	•			
	BRLED300/24	–	300	–		•	•					•	•					•	•			
	BRLED500	–	500	–				•	•	•				•	•	•				•	•	•
	BRLED500/24	–	500	–				•	•	•					•	•				•	•	•

* Requires light kit bracket to suit enclosure size
^ Light not included, purchased separately
▲ Available on request

TECHNICAL DRAWINGS

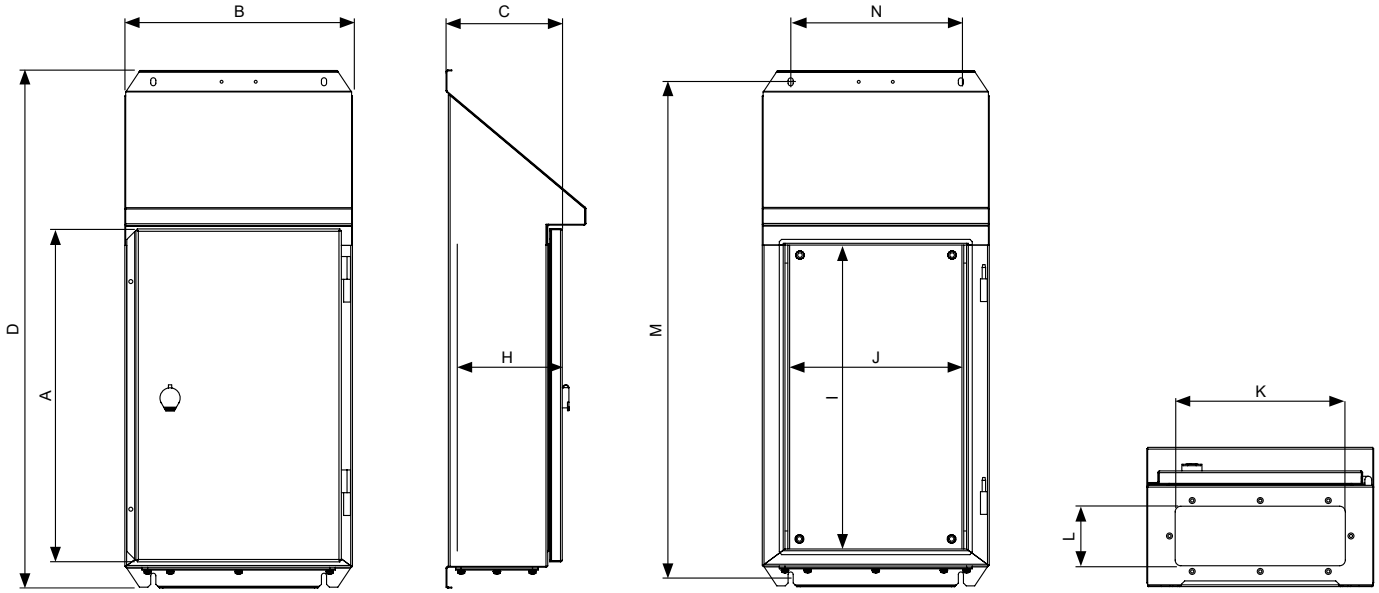

Front View | Side View | Front View (Door Removed) | Bottom View

Bowen Series with Sunshades

Mining and Industrial Enclosures

- Designed to house terminations, pushbuttons, isolators or switchgear in industrial or demanding environments such as washeries, processing and sampling stations.
- Sunshades protect the internal equipment from the effects of the sun.
- Is well suited to applications that require front and side mounted switching devices.
- 40º sloping roof and 40mm roof overhang reduces material build-up.
- Internal door rails fitted to ensure mounting flexibility.
- Lifting lugs conform to *AS4991:Lifting Devices*.
- One (1) tonne SWL on each lifting lug.
- Conformity, Approvals:
  Lloyds Register #06/10007 (E2)
- Manufactured from 1.5mm 316 stainless steel.
- N4 surface finish.

Comes standard with:

- Steel mounting pan powdercoated white
- Top and bottom mounting flanges
- Internal 6mm earth stud
- Lock dust cover with stainless steel lock with 8mm square slotted stainless steel insert
- Lifting lugs on 800mm & 1200mm high enclosures

ORDERING GUIDE

	Dimensions (mm)														
	External						Internal	Mounting Pan		Gland Opening		Mounting Centres		Material Thk.	
Part Number	Height (A)	Width (B)	Depth (C)	Total Height (D)	Total Width (E)	Total Depth (F)	Usable Depth* (H)	Height (I)	Width (J)	Width (K)	Depth (L)	Height (M)	Width (N)	Body	Door
BL040320/S/SK▲	400	300	200	709	409	250	179	345	210	200	105	676	200	1.5	1.5
BL040420/S/SK▲	400	400	200	709	509	250	150	345	310	300	105	676	300	1.5	1.5
BL060420/S/SK▲	600	400	200	909	509	250	150	545	310	300	105	876	300	1.5	1.5
BL060630/S/SK▲	600	600	300	993	709	350	250	545	510	500	205	960	500	1.5	1.5
BL080630/S/SK▲	800	600	300	1193	709	350	250	745	510	500	205	1160	500	1.5	1.5
BL120830/S/SK▲	1200	800	300	1593	909	350	250	1145	710	700	205	1560	700	1.5	1.5

* Mounting pan to inside of door
▲ Available on request

ACCESSORIES

Product	Part Number	Dimensions (mm) Height	Width	Depth	BL040320/S/SK	BL040420/S/SK	BL060420/S/SK	BL060630/S/SK	BL080630/S/SK	BL120830/S/SK
Hinged escutcheon – 2mm zinc coated steel (white)	BWHE040420	300	312	200		•				
	BWHE060420	500	312	200			•			
	BWHE060630	500	507	300				•		
	BWHE080630	700	507	300					•	
	BWHE120830	1100	710	300						•
Light kit brackets^	BWLKB04▲	–	–	–		•	•			
	BWLKB06▲	–	–	–				•	•	
	BWLKB08▲	–	–	–						•
LED Light*	BRLED300	–	300	–		•	•			
	BRLED300/24	–	300	–		•	•			
	BRLED500	–	500	–				•	•	•
	BRLED500/24	–	500	–				•	•	•

* Requires light kit bracket to suit enclosure size
^ Light not included, purchased separately
▲ Available on request

TECHNICAL DRAWINGS

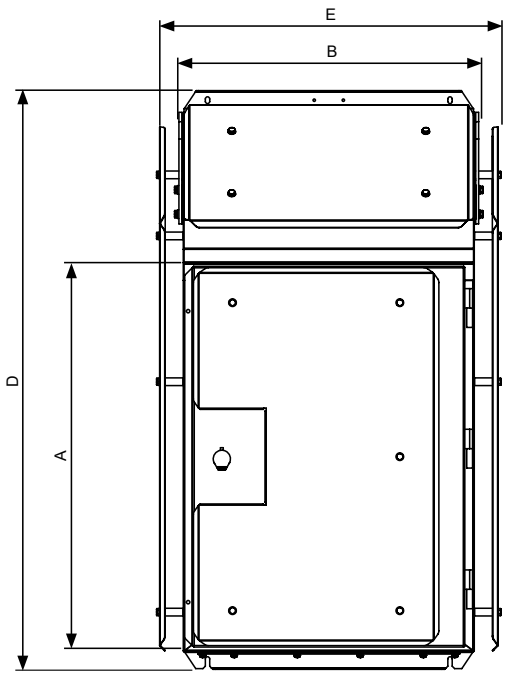

Front View

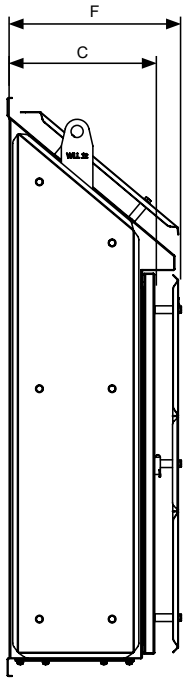

Side View

Pilbara SP – Zinc Coated Steel

Mining and Industrial Enclosures

- Designed in sizes suitable for the most common mining, mineral processing and infrastructure projects.
- Typically used in local control stations, mini control consoles or motor isolation control stations.
- 30º sloping roof to prevent build up of water and solids.
- Lifting lugs conform to *AS4991:Lifting Devices*.
- One (1) tonne SWL on each lifting lug (excluding SP040425).
- Easy installation with top and bottom mounting flanges.
- Conformity, Approvals:
  Lloyds Register #06/10007 (E2)
- Region D wind rated to AS1170.2-2002:
  Structural design actions - Wind actions
- Manufactured from 2mm zinc coated steel.
- Powdercoated X15 orange.

Comes standard with:

- 2mm steel mounting pan powdercoated white
- Chrome steel padlockable swing handle with LockSock®
- 3-point locking (excluding SP040425 range)
- 6mm aluminium gland plate
- Lifting lugs (excluding SP040425 range)

ORDERING GUIDE

	Dimensions (mm)											
	External				Internal	Mounting Pan		Gland Opening		Mounting Centres		
Part Number	Height (A)	Width (B)	Depth (C)	Total Height (D)	Usable Depth (E)*	Height (F)	Width (G)	Width (H)	Depth (I)	Height (J)	Width (K)	Weight (kg)
SP070522	700	500	200	952	153	630	430	420	100	920	400	39
SP100822	1000	800	200	1250	153	930	730	720	100	1218	700	73
SP040425	400	400	250	679	203	330	330	320	140	641	300	25
SP070535	700	500	350	1037	303	630	430	420	240	1005	400	47
SP100840	1000	800	400	1365	353	930	730	640	210	1334	600	88

* Mounting pan to inside of door

TECHNICAL DRAWINGS

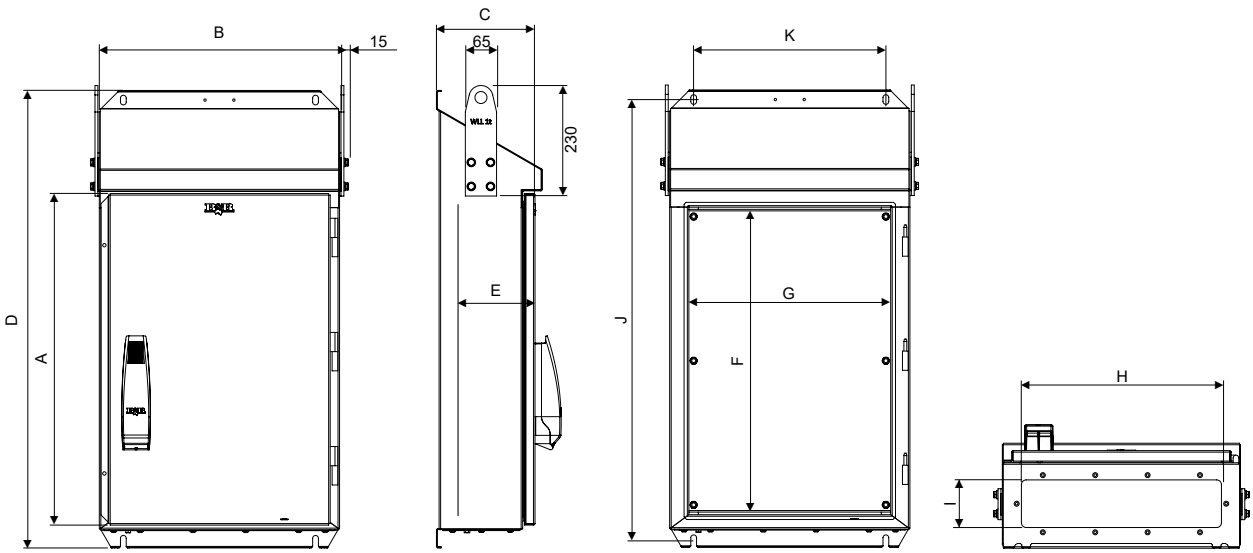

Front View | Side View | Front View Door Removed | Bottom View

ACCESSORIES

Product	Description	Part Number	Dimensions (mm) Height	Width	Depth	SP070522	SP100822	SP040425	SP070535	SP100840
Hinged escutcheon		SPHE0404	325	320	18			•		
		SPHE0705	625	420	18	•			•	
		SPHE1008	925	720	18		•			•
Gland plate	Brass	SPGB32/6	380	200	6			•		
		SPGB41/6▲	480	160	6	•				
		SPGB43/6	480	300	6				•	
		SPGB71/6▲	780	160	6		•			
		SPGB72/6▲	700	270	6					•
	Aluminium	SPGA32/6	380	200	6			•		
		SPGA41/6	480	160	6	•				
		SPGA43/6	480	300	6				•	
		SPGA71/6	780	160	6		•			
		SPGA72/6	700	270	6					•
Pintle hinge	316 stainless steel	SP/H/S	–	–	–	•	•	•	•	•
Retro-fit sunshades	Zinc coated steel (2mm) – powdercoated X15 Orange	SPSK040425*▲	400	400	270			•		
		SPSK070522▲	700	500	220	•				
		SPSK070535▲	700	500	370				•	
		SPSK100822▲	1000	800	220		•			
		SPSK100840▲	1000	800	400					•
LED light kit	12V	BRLED300	–	300	–	•		•	•	
		BRLED500	–	500	–		•			
	24V	BRLED300/24	–	300	–	•		•	•	
		BRLED500/24	–	500	–					•
Light mounting kit	To suit LED light kits	IPLKB04^	–	–	–			•		
		SPLKB05^▲	–	–	–	•			•	
		IPLKB08^	–	–	–		•			•

* Does not come with a front sunshade.
^ Light not included, purchased separately
▲ Available on request

Pilbara SP – 316 Stainless Steel

Mining and Industrial Enclosures

- Designed in sizes suitable for the most common mining, mineral processing and infrastructure projects.
- Typically used in local control stations, mini control consoles or motor isolation control stations.
- 30º sloping roof to prevent build up of water and solids.
- Lifting lugs conform to *AS4991:Lifting Devices*.
- One (1) tonne SWL on each lifting lug (excluding SP040425).
- Easy installation with top and bottom mounting flanges.
- Conformity, Approvals:
  Lloyds Register #06/10007 (E2)
- Region D wind rated to AS1170.2-2002: Structural design actions - Wind actions
- Manufactured from 1.5mm 316 stainless steel.
- N4 surface finish or powdercoated X15 orange.

Comes standard with:

- 2mm steel mounting pan powdercoated white
- Stainless steel padlockable swing handle with LockSock®
- 3-point locking (excluding SP040425 range)
- 2mm stainless steel gland plate
- Lifting lugs (excluding SP040425 range)

ORDERING GUIDE

Part Number		Dimensions (mm) External				Internal	Mounting Pan		Gland Opening		Mounting Centres		Weight	
316SS (N4)	X15 Orange	Height (A)	Width (B)	Depth (C)	Total Height (D)	Usable Depth (E)*	Height (F)	Width (G)	Width (H)	Depth (I)	Height (J)	Width (K)	/S (kg)	/SRO (kg)
SP070522/S	SP070522/SRO	700	500	200	952	153	630	430	420	100	920	400	34	35
SP100822/S	SP100822/SRO	1000	800	200	1250	153	930	730	720	100	1218	700	61	65
SP040425/S	SP040425/SRO	400	400	250	679	203	330	330	320	140	641	300	20	21
SP070535/S	SP070535/SRO	700	500	350	1037	303	630	430	420	240	1005	400	40	42
SP100840/S	SP100840/SRO	1000	800	400	1365	353	930	730	640	210	1334	600	73	78

* Mounting pan to inside of door

TECHNICAL DRAWINGS

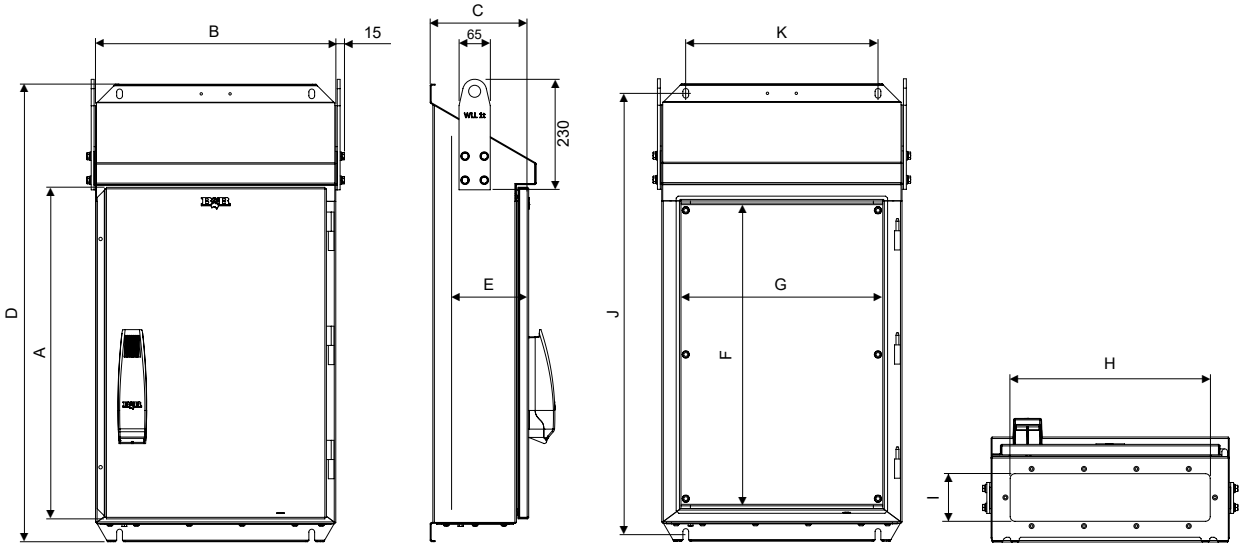

Front View | Side View | Front View Door Removed | Bottom View

ACCESSORIES

Product	Description	Part Number	Dimensions (mm) Height	Width	Depth	SP070522/S	SP100822/S	SP040425/S	SP070535/S	SP100840/S
Hinged escutcheon		SPHE0404	325	320	18			•		
		SPHE0705	625	420	18	•			•	
		SPHE1008	925	720	18		•			•
Gland plate	Brass	SPGB32/6	380	200	6			•		
		SPGB41/6▲	480	160	6	•				
		SPGB43/6	480	300	6				•	
		SPGB71/6▲	780	160	6		•			
		SPGB72/6▲	700	270	6					•
	Aluminium	SPGA32/6	380	200	6			•		
		SPGA41/6	480	160	6	•				
		SPGA43/6	480	300	6				•	
		SPGA71/6	780	160	6		•			
		SPGA72/6	700	270	6					•
Pintle hinge	316 stainless steel	SP/H/S	–	–	–	•	•	•	•	•
Retro-fit sunshades*	316 stainless steel (1.5mm) - N4 finish	SPSK040425/S*▲	400	400	270			•		
		SPSK070522/S▲	700	500	220	•				
		SPSK070535/S▲	700	500	370				•	
		SPSK100822/S▲	1000	800	220		•			
		SPSK100840/S▲	1000	800	400					•
	316 stainless steel (1.5mm) – X15 powdercoated	SPSK040425/SRO*▲	400	400	270			•		
		SPSK070522/SRO▲	700	500	220	•				
		SPSK070535/SRO▲	700	500	370				•	
		SPSK100822/SRO▲	1000	800	220		•			
		SPSK100840/SRO▲	1000	800	400					•
LED light kit	12V	BRLED300	–	300	–	•		•	•	
		BRLED500	–	500	–		•			
	24V	BRLED300/24	–	300	–	•		•	•	
		BRLED500/24	–	500	–					•
Light mounting kit	To suit LED light kits	IPLKB04^	–	–	–			•		
		SPLKB05^▲	–	–	–	•			•	
		IPLKB08^	–	–	–		•			•

* Does not come with a front sunshade.
^ Light not included, purchased separately
▲ Available on request

Pilbara SP with Sunshades – Zinc Coated Steel

Mining and Industrial Enclosures

- Designed for the most common mining, mineral processing and infrastructure projects.
- used in local control stations, mini control consoles or motor isolation control stations.
- 30º sloping roof to prevent build up of water and solids.
- Lifting lugs conform to *AS4991:Lifting Devices*.
- One (1) tonne SWL on each lifting lug (excluding SP040425).
- Easy installation with top and bottom mounting flanges.
- Conformity, Approvals - Lloyds Register #06/10007 (E2)
- Region D wind rated to AS1170.2-2002: Structural design actions - Wind actions
- Powdercoated X15 orange and manufactured from
  - Enclosure - 2mm zinc coated steel
  - Sunshades - 1.6mm zinc coated steel.

Comes standard with:

- Sunshades – top, door and both sides
- Steel mounting pan powdercoated white
- Chrome steel padlockable swing handle with LockSock®
- 3-point locking (excluding SP040425 range)
- 6mm aluminium gland plate
- Lifting lugs on enclosures (excluding SP040425 range)

ORDERING GUIDE

	Dimensions (mm)														
	External					Internal	Mounting Pan		Gland Opening		Mounting Centres		Opening		
Part Number	Height (A)	Width (B)	Depth (C)	Total Height (D)	Total Width (E)	Usable Depth (F)*	Height (G)	Width (H)	Width (I)	Depth (J)	Height (K)	Width (L)	Height (M)	Width (N)	Weight (kg)
SP070522/SK	700	500	200	952	600	153	630	430	420	100	920	400	640	420	105
SP100822/SK	1000	800	200	1250	900	153	930	730	720	100	1218	700	940	720	150
SP040425/SK#	400	400	250	679	500	203	330	330	320	140	641	300	340	320	60
SP070535/SK	700	500	350	1037	600	303	630	430	420	240	1005	400	640	420	120
SP100840/SK	1000	800	400	1365	900	353	930	730	640	210	1334	600	940	720	180

* From mounting pan to inside of door.
# Does not come with a front sunshade.

TECHNICAL DRAWINGS

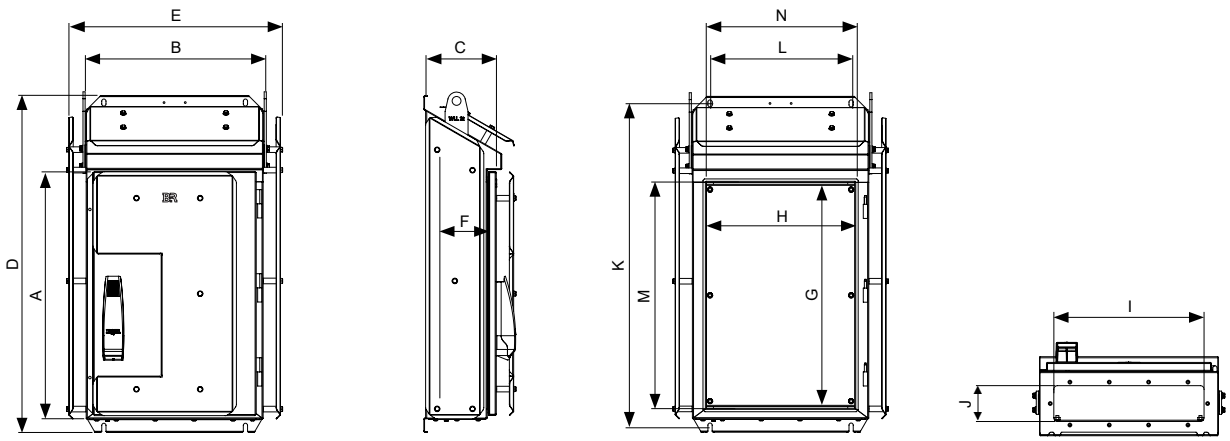

Front View | Side View | Front View (Door Removed) | Bottom View

ACCESSORIES

Product	Description	Part Number	Dimensions (mm) Height	Width	Depth	SP070522/SK	SP100822/SK	SP040425/SK	SP070535/SK	SP100840/SK
Hinged escutcheon	Zinc coated steel	SPHE0404	325	320	18			•		
		SPHE0705	625	420	18	•			•	
		SPHE1008	925	720	18		•			•
Gland plate	Brass	SPGB32/6	380	200	6			•		
		SPGB41/6▲	480	160	6	•				
		SPGB43/6	480	300	6				•	
		SPGB71/6▲	780	160	6		•			
		SPGB72/6▲	700	270	6					•
	Aluminium	SPGA32/6	380	200	6			•		
		SPGA41/6	480	160	6	•				
		SPGA43/6	480	300	6				•	
		SPGA71/6	780	160	6		•			
		SPGA72/6	700	270	6					•
Hinge	316 stainless steel	SP/H/S	–	–	–	•	•	•	•	•
LED light kit	12V	BRLED300	–	300	–	•		•	•	
		BRLED500	–	500	–		•			
	24V	BRLED300/24	–	300	–	•		•	•	
		BRLED500/24	–	500	–					•
Light mounting kit	To suit LED light kits	IPLKB04^	–	–	–			•		
		SPLKB05^▲	–	–	–	•			•	
		IPLKB08^	–	–	–		•			•

^ Light not included, purchased separately
▲ Available on request

Pilbara SP with Sunshades – 316 Stainless Steel

Mining and Industrial Enclosures

- Designed for the most common mining, mineral processing and infrastructure projects.
- used in local control stations, mini control consoles or motor isolation control stations.
- 30º sloping roof to prevent build up of water and solids.
- Lifting lugs conform to *AS4991:Lifting Devices*.
- One (1) tonne SWL on each lifting lug (excluding SP040425).
- Easy installation with top and bottom mounting flanges.
- Conformity, Approvals:
  Lloyds Register #06/10007 (E2)
- Region D wind rated to AS1170.2-2002: Structural design actions - Wind actions
- Manufactured from 1.5mm 316 stainless steel.
- N4 surface finish or powdercoated X15 orange.

Comes standard with:

- Sunshades – top, door and both sides
- Steel mounting pan powdercoated white
- Stainless steel padlockable swing handle with LockSock®
- 3-point locking (excluding SP040425 range)
- 2mm stainless steel gland plate
- Lifting lugs on enclosures (excluding SP040425 range)

ORDERING GUIDE

Part Number		Dimensions (mm)															
		External					Internal	Mounting Pan		Gland Opening		Mounting Centres		Opening		Weight	
316SS (N4)	X15 Orange	Height (A)	Width (B)	Depth (C)	Total Height (D)	Total Width (E)	Usable Depth (F)*	Height (G)	Width (H)	Width (I)	Depth (J)	Height (K)	Width (L)	Height (M)	Width (N)	S/SK (kg)	SRO/SK (kg)
SP070522/S/SK	SP070522/SRO/SK	700	500	200	952	600	153	630	430	420	100	920	400	640	420	95	98
SP100822/S/SK	SP100822/SRO/SK	1000	800	200	1250	900	153	930	730	720	100	1218	600	940	720	135	141
SP040425/S/SK#	SP040425/SRO/SK#	400	400	250	679	500	203	330	330	320	140	641	300	340	320	54	56
SP070535/S/SK	SP070535/SRO/SK	700	500	350	1037	600	303	630	430	420	240	1005	400	640	420	110	114
SP100840/S/SK	SP100840/SRO/SK	1000	800	400	1365	900	353	930	730	640	210	1334	600	940	720	160	168

W* From mounting pan to inside of door.
Does not come with a front sunshade.

TECHNICAL DRAWINGS

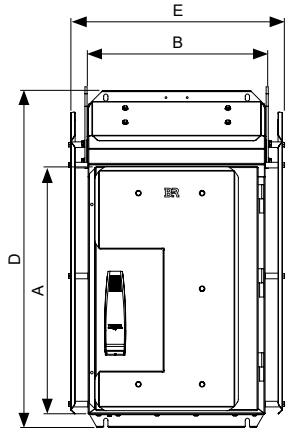

Front View

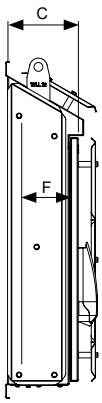

Side View

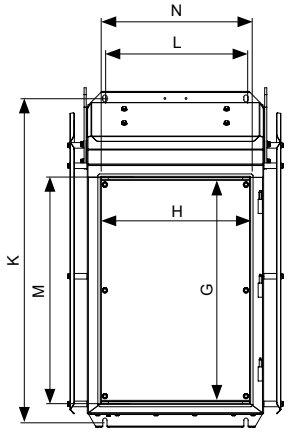

Front View
(Door Removed)

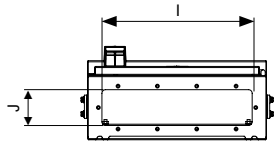

Bottom View

ACCESSORIES

Product	Description	Part Number	Dimensions (mm) Height	Width	Depth	SP070522/S/SK	SP070522/SRO/SK	SP100822/S/SK	SP100822/SRO/SK	SP040425/S/SK	SP040425/SRO/SK	SP070535/S/SK	SP070535/SRO/SK	SP100840/S/SK	SP100840/SRO/SK
Hinged escutcheon	Zinc coated steel	SPHE0404	325	320	18					•	•				
		SPHE0705	625	420	18	•	•					•	•		
		SPHE1008	925	720	18			•	•					•	•
Gland plate	Brass	SPGB32/6	380	200	6					•	•				
		SPGB41/6▲	480	160	6	•	•								
		SPGB43/6	480	300	6							•	•		
		SPGB71/6▲	780	160	6			•	•						
		SPGB72/6▲	700	270	6									•	•
	Aluminium	SPGA32/6	380	200	6					•	•				
		SPGA41/6	480	160	6	•	•								
		SPGA43/6	480	300	6							•	•		
		SPGA71/6	780	160	6			•	•						
		SPGA72/6	700	270	6									•	•
Hinge	316 stainless steel	SP/H/S	–	–	–	•	•	•	•	•	•	•	•	•	•
LED light kit	12V	BRLED300	–	300	–	•				•	•				
		BRLED500	–	500	–		•								
	24V	BRLED300/24	–	300	–	•				•	•				
		BRLED500/24	–	500	–							•			
Light mounting kit	To suit LED light kits	IPLKB04^	–	–	–					•					
		SPLKB05^▲	–	–	–	•					•		•		
		IPLKB08^	–	–	–		•	•	•			•		•	•

^ Light not included, purchased separately
▲ Available on request

Lambert LB

Sunshaded Mining Enclosures

- 30º sloping roof to prevent build up of water and solids.
- Fully enclosed 3-point locking system.
- Easy installation with top and bottom mounting flanges.
- Removable doors with pintle hinges.
- Door opening angle of 110º with door stay fitted.
- Lifting lugs conform to *AS4991:Lifting Devices*.
- One (1) tonne SWL on each lifting lug.
- Conformity, Approvals:
  Lloyds Register #06/10007 (E2)
- Region D wind rated to AS1170.2-2002: Structural design actions - Wind actions
- Manufactured from 1.5mm 316 stainless steel.
- N4 surface finish or powdercoated X15 orange.

Comes standard with:

- Sunshades – top, doors, sides and rear
- Full width steel rear mounting pan powdercoated pearl white
- Stainless steel padlockable swing handle
- Door stays
- 3mm brass gland plate
- Door rails
- Earth strap kit

ORDERING GUIDE

Part Number		Dimensions (mm)															
					External			Internal	Mounting Pan		Gland Opening		Mounting Centres		Opening		
316SS (N4)	X15 Orange	Height (A)	Width (B)	Depth (C)	Total Height (D)	Total Width (E)	Total Depth (F)	Usable Depth (G)	Height (H)	Width (I)	Width (J)	Depth (K)	Height (L)	Width (M)	Height (N)	Width (O)	Weight* (kg)
LB100840/S^	LB100840/SRO^	1000	800	400	1368	896	502	324	930	730	640	210	1335	600	940	720	250.0
LB101040/S^	LB101040/SRO^	1000	1000	400	1368	1096	502	324	930	930	840	210	1335	800	940	920	300.0
LB101440/S	LB101440/SRO	1000	1400	400	1368	1496	502	324	930	1330	540	210	1335	1320	940	1320	320.0

^ Single Door
* Includes crate for safe transportation

ACCESSORIES

Product	Description	Part Number	Dimensions (mm) Height	Width	Depth	LB100840/S	LB101040/S	LB101440/S	LB100840/SRO	LB101040/SRO	LB101440/SRO
Side mounting pan	Powdercoated Pearl White	LBSMP1040	930	200	15	•	•	•	•	•	•
Power Case	Lockable	LBC221▲	233	215	167	•	•	•	•	•	•
		LPC231 ▲	233	315	167	•	•	•	•	•	•
		LPC261 ▲	233	615	167	•	•	•	•	•	•
Gland Plate	6mm Aluminium - 2 required	LBGA62/6	600	270				•			•
	6mm Brass - 2 required	LBGB62/6	600	270				•			•
	6mm Aluminium - 1 required	LBGA72/6	700	270		•			•		
	6mm Brass - 1 required	LBGB72/6	700	270		•			•		
	6mm Aluminium - 1 required	LBGA92/6	900	270			•			•	
	6mm Brass - 1 required	LBGB92/6	900	270			•			•	

▲ Available on request

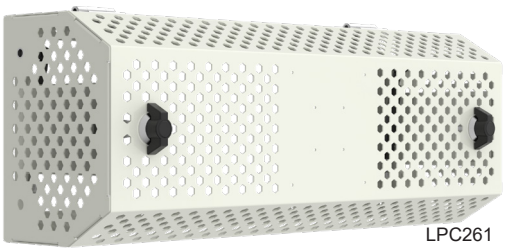

LPC261

TECHNICAL DRAWINGS

LB100840/S & LB101040/S

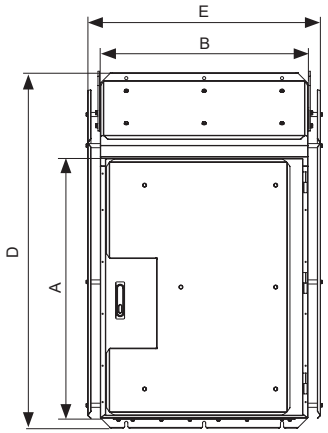

Front View

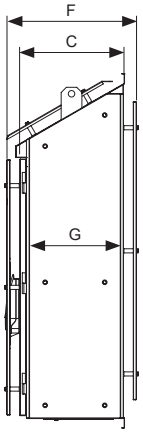

Side View

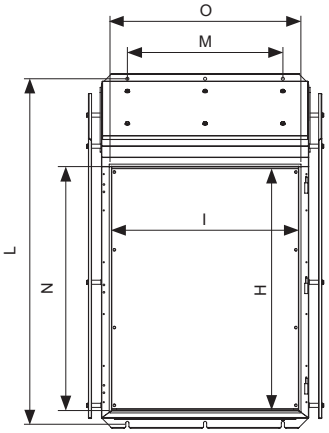

Front View with internals

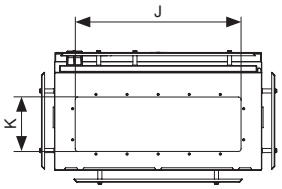

Bottom View

LB101440/S

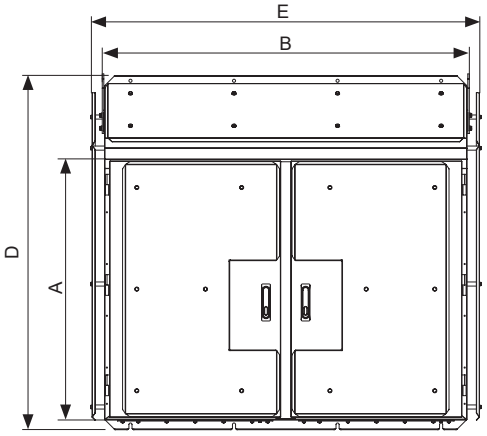

Front View

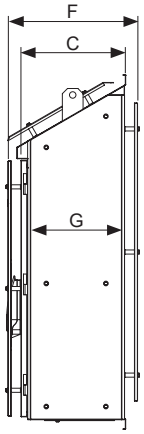

Side View

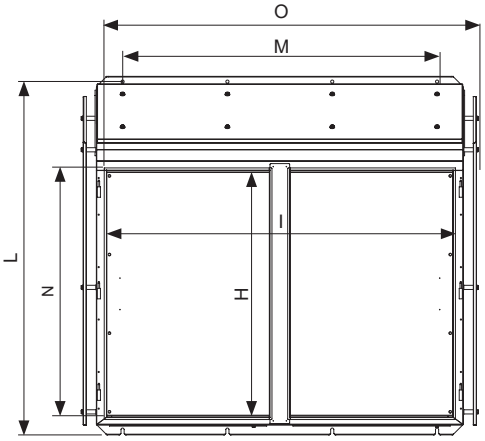

Front View with internals

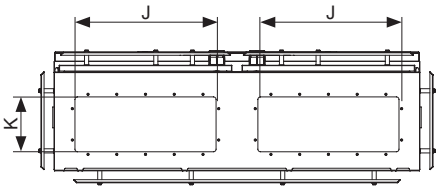

Bottom View

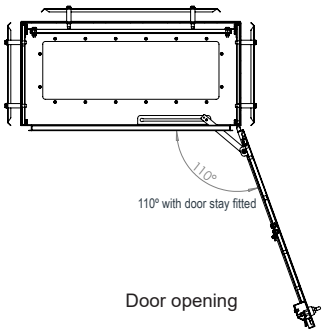

Door opening

Monarch SMB & CT

Small Main Boards up to 490A and CT Chassis Systems up to 630A

- Small main board developed as a solution to various local electricity and distribution requirements.
- CT chassis are type tested and certified for up to 36kA for 1 second.
- Manufactured from 1.6mm thick zinc coated steel or 1.5mm 316 stainless steel.
- Powdercoated Pebble Grey RAL7032 or N4 surface finish.

ORDERING GUIDE

Part Number	Description	CT Chassis Rating (A)	Test	Dimensions (mm) Height	Width	Depth	Weight (kg)
SMB ENCLOSURES IP66							
SMB1/15	Cabinet supplied with meter and consumer panel (ex VIC)	490A	36kA for 1 sec	2075	800	500	185.0
SMB1/15/S	Cabinet supplied with meter and consumer panel (ex VIC)	490A	36kA for 1 sec	2075	800	500	170.0
CT ENCLOSURES IP33							
CTB/E2	Cubicle empty fitted with 3 x 32A HRC potentional fuses (holders only), weatherproof. To suit CTC200/400A and CTC/630A. Available in RAL7035 Light Grey.			500	720	340	17.0
CT CHASSIS							
CTC200/400A	CT chassis for S-Type CTs	200/400A	25kA for 1 sec	500	400	95	8.0
CTC630A	CT chassis for T-Type CTs	630A	36kA for 1 sec	500	400	120	11.0

SMALL MAIN BOARD ACCESSORIES

Part Number	Description
CT/SQK	Potential fuse mounting bracket to suit CT1 and SMB (South QLD area)
CTPFK	Current transformer potential fuse kit – no fuse links

DID YOU KNOW?
B&R's range of IP66 Infinity 3G modular switchboards are an alternative solution to the Monarch SMB & CT enclosures.

Project Profile

AuScope COR Project, WA

AuScope CORS is a network of Global Navigational Satellite System Continuously Operating Reference Station (CORS) located around Australia, forming part of the federally funded AuScope program.

CORS technology is now being used worldwide with applications developing in many fields including scientific research, precision navigation, engineering and precision agriculture. AuScope is a non-profit company putting
Australia in the lead for international geoscience and geospatial research.

Applications which may use information produced by the AuScope CORS network include monitoring both slow and rapid movement of the earth's crust, calculating and monitoring sea level change, updating co-ordinate data and atmospheric modelling. The information captured by AuScope contributes significantly to environmental monitoring and management, and provides a platform for innovative commercial developments in the spatial, minerals, energy and water industries.

The operational life of an AuScope CORS site is a minimum of 20 years. For the purpose of scientific research as well as the determination and maintenance of the co-ordinate datum, long uninterrupted "time series" data is crucial. Ideally, once a site is established, it will operate on a permanent basis. For this reason, a major consideration when selecting a site, is its long-life and security.

> "B&R we able supply a solution to meet the customer's needs and suit the environment in which it is installed."

THE B&R SOLUTION

B&R were able to supply Field FC enclosures to meet customer specifications. The key features being security and Australian made product ensured long-life. By working closely with the customer, B&R were able to design a product to meet the needs of the customer. has been able to satisfy their needs with a diverse range of products to suit the environment in which it is installed.

Signature SE

Our Signature SE product range offers customers a type-tested, AS/NZS 61439 compliant switchboard and motor control centre solution up to 3200Amp.

Signature SE range of products offer customers a type-tested, certified solution for any commercial or industrial electrical installations. Signature SE range provides quality and performance and is designed to make final assembly of busbars and electrical equipment easy and affordable.

The Signature SE switchboard system has been extensively used over the past fifteen years on major mining and infrastructures projects throughout Australia and SE Asia.

In recent times, the addition of our Signature Express range enables customers to purchase a pre-configured, fully assembled product shipped from our factory in 10 working days after we receive placement of commercially and technically clear order.

Comparison of Signature SE Range

		Signature Express	Signature SE**
Service & Delivery	Shipping ex factory within 10 working days	✓	
	Shipping ex factory 20-25 working days		✓
	Internal components pre-shipment within 2 -3 working days	✓	✓
	Quote turnaround time < 24 hours	✓	
	CAD Blocks available	✓	✓
Busbar	Current Rating	1600A*	3400A
Variation	Customisable		✓
Finish	Available in any powdercoat colour	X-15 Orange Ripple only	✓
Bases	75mm high bases powdercoated matte black	✓	✓
	50mm high bases		✓
Configurations	Top Bus – 600mm deep	✓	✓
	Top Bus – 800mm deep		✓
	Mid Bus – 600mm deep	✓	✓
	Mid Bus – 800mm deep		✓
	Bottom Bus – 600mm deep	✓	✓
	Bottom Bus – 800mm deep		✓

* Limited by recommended capacity of an ACB main incomer.
** The full range of standard Signature SE configurations are available on a 4-6 week lead time.

Features of Signature SE

- Modular construction
- NATA / ASTA certified
- Configurations eliminates duplication of parts and maximises the efficiency of assembly.
- Ingress Protection IP43 or IP55.
- Short circuit withstand 65kA/3
- Rated insulation voltage <1000V
- Dielectric properties 3.5kV
- Impulse voltage withstand <16kV
- Thermal current rating Main Bus up to 3200A
- Thermal current rating vertical dropper bus <1000A
- In-built arc fault containment (standard tests)
- CAD blocks available online.

NEED TO KNOW MORE?
For more information on any of our AS/NZS 61439 certified solutions visit brenclosures.com.au or contact your local B&R sales representative.

Locks

To suit special purpose enclosures

Standard Locks

Enclosure	Stl	SS
Universal DD ≤1600mm	DD020 – chromed steel with 7mm square steel insert	DD020/PS – black powdercoated lock with 7mm square stainless steel insert
Universal DD +1600mm	DD050 – lockable L handle keyed 92268	DD050 – lockable L handle keyed 92268
Incline SR	–	NI020/S – stainless steel lock with 7mm square stainless steel insert
Hedland PH	–	NI020/S – stainless steel lock with 7mm square stainless steel insert
Finucane FI	–	NI020/S – stainless steel lock with 7mm square stainless steel insert
Bowen Series	–	NI028S/S – stainless steel lock with 8mm square slotted stainless steel insert
Pilbara SP	SP/LCK – chromed steel padlockable swing handle	SP/LCK/S – stainless steel padlockable swing handle
Lambert LB	–	SP/LCK/S – stainless steel padlockable swing handle
Miner ME	NI020 – chromed steel with 7mm square steel insert	–

Lock Options for Special Purpose Enclosures

There are a number of lock options available that are suitable for use on special purpose enclosures. Contact your local sales representative to discuss your requirements.

Product	Description	Part Number	Standard Lock/Insert	Alternative insert	Key	
					Lockable handles	Aluminium, 4-way
Turnbuckle	chromed steel	NI020	7mm square – steel	See page 5		SKZ
		DD020	7mm square – steel	See page 5		SKZ
	powdercoated	NI020/PS	7mm square – stainless steel	See page 5		SKZ
		DD020/PS	7mm square – stainless steel	See page 5		SKZ
	stainless steel	NI020/S	7mm square – stainless steel	See page 5		SKZ
		NI028S/S	8mm square slotted – stainless steel	See page 5		
Wing knob	lockable	NI030	Key code 92268		SK3	
		DD030	Key code 92268		SK3	
	non-lockable	NI111	–			
		DD111	–			
T-handle	lockable	NI040	Key code 92268		SK3	
		DD040	Key code 92268		SK3	
L-handle	lockable	NI050	Key code 92268		SK3	
		DD050	Key code 92268		SK3	
	padlockable – steel	NI052	–			
		DD052	–			
	padlockable – stainless steel	NI052/S	–			
		DD052/S	–			
Swing handle	padlockable – steel	SP/LCK	–			
	padlockable – stainless steel	SP/LCK/S	–			
LockSock®	plastic	SP/LCK/DC	To suit SP/LCK			
Dust cap	plastic	NI020/DC	To suit NI020 lock			

Locks

To suit special purpose enclosures

020

020/PS

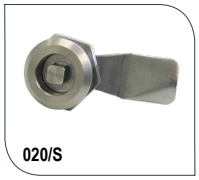
020/S

028S/S

030

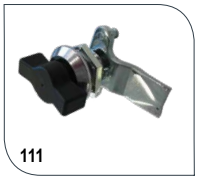
111

040

050

052

052/S

060

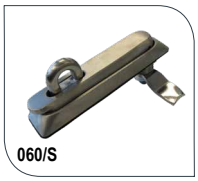
060/S

SP/LCK/DC

NI020/DC

Lock Inserts for Locks

The NI020 locks are available with an option lock insert for use on all special purpose enclosures. Contact your local sales engineer to discuss your requirements.

				3mm double bit pin		8mm square		8mm square slotted	8mm triangle	
To suit lock style	Description	To suit lock	Standard Insert	Steel	Stainless Steel	Steel	Stainless Steel	Stainless Steel	Steel	Stainless Steel
Turnbuckle	chromed steel	NI020 or DD020	7mm square – steel	LKINS3P		LKINS8S		LKINS8SS/S	LKIN8T	
	powdercoated with SS insert	NI020/PS or DD020/PS	7mm square – stainless steel		LKINS3P/S		LKINS8S/S	LKINS8SS/S		LKINS8T/S
	stainless steel	NI020/S or DD020/PS	7mm square – stainless steel		LKINS3P/S		LKINS8S/S	LKINS8SS/S		LKINS8T/S
Key required – aluminium			SKZ	SKZ	SKZ	SK8	SK8	SK8	SKZ	SKZ

Monarch IP – Zinc Coated Steel

Industrial Enclosures and Switchboard Building Systems

- Suitable for small motor control applications, lighting, CT metering and smaller switchboard applications.
- Premium enclosure and switchboard building system designed to be the ultimate
  in flexibility.
- Conformity, Approvals:
  Lloyds Register #06/10007 (E2)
- Region D wind rated to AS1170.2-2002: Structural design actions - Wind actions
- Manufactured from 1.6mm zinc coated steel.
- Powdercoated Pebble Grey RAL7032 or X15 Orange.

Comes standard with:

- 'C' rail mountings (4 rails on heights up to 1000mm and 8 rails on 1200mm and above)
- Gland plate (fitted internally or externally)
- Chromed steel lock with 7mm square steel insert (IP020) on units below 1600mm high and lockable L handles (IP050) on others
- 3-point locking on units of 600mm high and above
- Removable back on units 400mm deep and deeper
- Door rails and earth strap kit
- Laminated glass viewing window - 5.4mm thick

TECHNICAL DRAWINGS

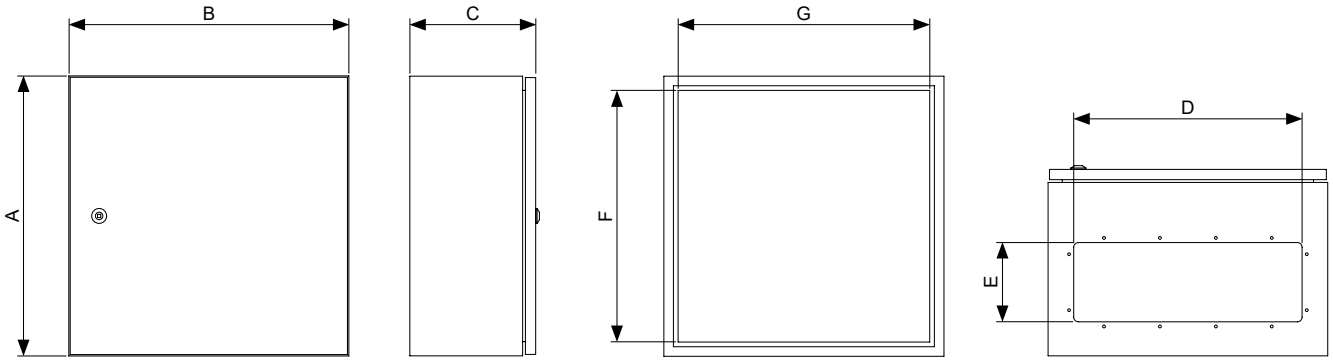

Front View | Side View | Front View Door Removed | Side View

ACCESSORIES QUICK SELECTION

Accessories	Page No.	Accessories	Page No.	Accessories	Page No.
Rainhoods	88	Escutcheon Rails	94	19" Mounting Rails	96
Gland Plates	88	Universal Rail Kits	94	Laptop Lecterns	97
Plinths	89	Door Stays	94	Document Holders	97
Vent Kits	89	Shelves	95	Schedule Holders	97
Vent Hoods	90	DIN Rails	95	Backmount Frame	97
Mounting Pans	90	Eye Bolts	95	Load Centre	97
Insulated Mounting Panels	91	Mounting Brackets	95	General Accessories	98
Double Hinged Insulating Panels	91	Standard Rails – C Section	96	Locks	99
Hinged & Fixed Escutcheons	92	Universal Rails	96	Lighting	100

ORDERING GUIDE

		Dimensions (mm)								
		External			Gland Opening		Opening			
Part Number	Part Number	Height (A)	Width (B)	Depth (C)	Width (D)	Depth (E)	Height (F)	Width (G)	Material Thickness (mm)	Weight (kg)
IP13132	IP13132/RO	400	400	270	250	120	340	340	1.2	13.0
IP21132	IP21132/RO	600	400	270	250	120	540	340	1.2	17.0
IP13212	IP13212/RO	400	600	270	440	120	340	540	1.6	17.0
IP21212	IP21212/RO	600	600	270	440	120	540	540	1.6	22.0
IP29212	IP29212/RO	800	600	270	440	120	740	540	1.6	28.0
IP37212	IP37212/RO	1000	600	270	440	120	940	540	1.6	33.0
IP45212	IP45212/RO	1200	600	270	440	120	1140	540	1.6	38.0
IP21292	IP21292/RO	600	800	270	440	120	540	740	1.6	28.0
IP13214	IP13214/RO	400	600	400	490	170	340	540	1.6	21.0
IP21214	IP21214/RO	600	600	400	490	170	540	540	1.6	27.0
IP29214	IP29214/RO	800	600	400	490	170	740	540	1.6	28.0
IP45214	IP45214/RO	1200	600	400	490	170	1140	540	1.6	45.0
IP61214	IP61214/RO	1600	600	400	490	170	1540	540	1.6	57.0
IP69214	IP69214/RO	1800	600	400	490	170	1740	540	1.6	63.0
IP77214	IP77214/RO	2000	600	400	490	170	1940	540	1.6	69.0
IP25254	IP25254/RO	700	700	400	490	170	640	640	1.6	33.0
IP37254	IP37254/RO	1000	700	400	490	170	940	640	1.6	43.0
IP21294	IP21294/RO	600	800	400	490	170	540	740	1.6	33.0
IP29294	IP29294/RO	800	800	400	490	170	740	740	1.6	40.0
IP37294	IP37294/RO	1000	800	400	490	170	940	740	1.6	47.0
IP45294	IP45294/RO	1200	800	400	490	170	1140	740	1.6	54.0
IP61294	IP61294/RO	1600	800	400	490	170	1540	740	1.6	69.0
IP69294	IP69294/RO	1800	800	400	490	170	1740	740	1.6	76.0
IP77294	IP77294/RO	2000	800	400	490	170	1940	740	1.6	83.0
IP77135	IP77135/RO	2000	400	500	250	170	1940	340	1.6	48.0
IP29215	IP29215/RO	800	600	500	490	170	740	540	1.6	37.0
IP45215	IP45215/RO	1200	600	500	490	170	1140	540	1.6	50.0
IP61215	IP61215/RO	1600	600	500	490	170	1540	540	1.6	64.0
IP69215	IP69215/RO	1800	600	500	490	170	1740	540	1.6	70.0
IP77215	IP77215/RO	2000	600	500	490	170	1940	540	1.6	77.0
IP21295	IP21295/RO	600	800	500	490	170	540	740	1.6	37.0
IP45295	IP45295/RO	1200	800	500	490	170	1140	740	1.6	60.0
IP61295	IP61295/RO	1600	800	500	490	170	1540	740	1.6	76.0
IP69295	IP69295/RO	1800	800	500	490	170	1740	740	1.6	83.0
IP77295	IP77295/RO	2000	800	500	490	170	1940	740	1.6	91.0
IP77136	IP77136 /RO	2000	400	600	250	170	1940	340	1.6	54.0
IP29216	IP29216/RO	800	600	600	490	170	740	540	1.6	42.0
IP45216	IP45216/RO	1200	600	600	490	170	1140	540	1.6	56.0
IP61216	IP61216/RO	1600	600	600	490	170	1540	540	1.6	70.0
IP77216	IP77216/RO	2000	600	600	490	170	1940	540	1.6	84.0
IP77296	IP77296/RO	2000	800	600	490	170	1940	740	1.6	99.0
IP77218	IP77218/RO	2000	600	800	490	170	1940	540	1.6	99.0
IP77298	IP77298/RO	2000	800	800	490	170	1940	740	1.6	109.0

Monarch IP Viewing Window - Zinc Coated Steel

Industrial Enclosure & Switchboard Building System

- Suitable for small motor control applications, lighting, CT metering and smaller switchboard applications.
- Premium enclosure and switchboard building system designed to be the ultimate in flexibility.
- Conformity, Approvals:
  Lloyds Register #06/10007 (E2)
- Region D wind rated to AS1170.2-2002: Structural design actions - Wind actions
- Manufactured from 1.2/1.5mm 316 stainless steel.
- N4 surface finish or Powdercoated X15 Orange.

Comes standard with:

- 'C' rail mountings (4 rails on heights up to 800mm and 8 rails on 1200mm and above)
- Gland plate (fitted internally or externally on 400mm deep and deeper)
- Stainless steel lock with 7mm square stainless steel insert (IP020/S) on units below 1600mm high and lockable L handles (IP050) on others
- 3-point locking on units of 600mm high and above
- Removable back on units 400mm deep and deeper
- Door rails and earth strap kit
- Laminated glass viewing window - 5.4mm thick

ACCESSORIES QUICK SELECTION

Accessories	Page No.	Accessories	Page No.	Accessories	Page No.
Rainhoods	88	Escutcheon Rails	94	19" Mounting Rails	96
Gland Plates	88	Universal Rail Kits	94	Laptop Lecterns	97
Plinths	89	Door Stays	94	Document Holders	97
Vent Kits	89	Shelves	95	Schedule Holders	97
Vent Hoods	90	DIN Rails	95	Backmount Frame	97
Mounting Pans	90	Eye Bolts	95	Load Centre	97
Insulated Mounting Panels	91	Mounting Brackets	95	General Accessories	98
Double Hinged Insulating Panels	91	Standard Rails – C Section	96	Locks	99
Hinged & Fixed Escutcheons	92	Universal Rails	96	Lighting	100

ORDERING GUIDE

		Dimensions (mm)									
		External			Gland Opening		Opening		Viewing Window		
Part Number	Part Number X15 Ripple Orange	Height (A)	Width (B)	Depth (C)	Width (D)	Depth (E)	Height (F)	Width (G)	Height (H)	Width (I)	Weight (kg)
IP13132/S/WG▲	IP13132/SRO/WG▲	400	400	270	–	–	340	340	185	185	16.0
IP21132/S/WG▲	IP21132/SRO/WG▲	600	400	270	–	–	540	340	375	170	16.0
IP13212/S/WG▲	IP13212/SRO/WG▲	400	600	270	–	–	340	540	175	370	16.0
IP21212/S/WG▲	IP21212/SRO/WG▲	600	600	270	–	–	540	540	375	370	21.0
IP29212/S/WG▲	IP29212/SRO/WG▲	800	600	270	–	–	740	540	575	370	26.0
IP37212/S/WG▲	IP37212/SRO/WG▲	1000	600	270	–	–	940	540	775	370	31.0
IP45212/S/WG▲	IP45212/SRO/WG▲	1200	600	270	–	–	1140	540	975	370	36.0
IP21292/S/WG▲	IP21292/SRO/WG▲	600	800	270	–	–	540	740	375	570	26.0
IP13214/S/WG▲	IP13214/SRO/WG▲	400	600	400	490	170	340	540	175	370	20.0
IP21214/S/WG▲	IP21214/SRO/WG▲	600	600	400	490	170	540	540	375	370	25.0
IP29214/S/WG▲	IP29214/SRO/WG▲	800	600	400	490	170	740	540	575	370	31.0
IP45214/S/WG▲	IP45214/SRO/WG▲	1200	600	400	490	170	1140	540	975	370	42.0
IP61214/S/WG▲	IP61214/SRO/WG▲	1600	600	400	490	170	1540	540	1375	370	53.0
IP69214/S/WG▲	IP69214/SRO/WG▲	1800	600	400	490	170	1740	540	1575	370	59.0
IP77214/S/WG▲	IP77214/SRO/WG▲	2000	600	400	490	170	1940	540	1775	370	65.0
IP25254/S/WG▲	IP25254/SRO/WG▲	700	700	400	490	170	640	640	475	470	71.0
IP37254/S/WG▲	IP37254/SRO/WG▲	1000	700	400	490	170	940	640	775	470	31.0
IP21294/S/WG▲	IP21294/SRO/WG▲	600	800	400	490	170	540	740	375	570	40.0
IP29294/S/WG▲	IP29294/SRO/WG▲	800	800	400	490	170	740	740	575	570	31.0
IP37294/S/WG▲	IP37294/SRO/WG▲	1000	800	400	490	170	940	740	775	570	38.0
IP45294/S/WG▲	IP45294/SRO/WG▲	1200	800	400	490	170	1140	740	975	570	44.0
IP61294/S/WG▲	IP61294/SRO/WG▲	1600	800	400	490	170	1540	740	1375	570	51.0
IP69294/S/WG▲	IP69294/SRO/WG▲	1800	800	400	490	170	1740	740	1575	570	64.0
IP77294/S/WG▲	IP77294/SRO/WG▲	2000	800	400	490	170	1940	740	1775	570	71.0
IP77135/S/WG▲	IP77135/SRO/WG▲	2000	800	400	490	170	1940	740	1775	170	78.0
IP21295/S/WG▲	IP21295/SRO/WG▲	600	800	500	490	170	540	740	575	370	35.0
IP29215/S/WG▲	IP29215/SRO/WG▲	800	600	500	490	170	740	540	975	370	35.0
IP45215/S/WG▲	IP45215/SRO/WG▲	1200	600	500	490	170	1140	540	1375	370	47.0
IP61215/S/WG▲	IP61215/SRO/WG▲	1600	600	500	490	170	1540	540	1575	370	60.0
IP69215/S/WG▲	IP69215/SRO/WG▲	1800	600	500	490	170	1740	540	1775	370	66.0
IP77215/S/WG▲	IP77215/SRO/WG▲	2000	600	500	490	170	1940	540	375	570	72.0
IP45295/S/WG▲	IP45295/SRO/WG▲	1200	800	500	490	170	1140	740	975	570	57.0
IP61295/S/WG▲	IP61295/SRO/WG▲	1600	800	500	490	170	1540	740	1375	570	71.0
IP69295/S/WG▲	IP69295/SRO/WG▲	1800	800	500	490	170	1740	740	1575	570	78.0
IP77295/S/WG▲	IP77295/SRO/WG▲	2000	800	500	490	170	1940	740	1775	570	85.0
IP77136/S/WG▲	IP77136/SRO/WG▲	2000	400	600	120	440	1940	340	1775	170	73.0
IP29216/S/WG▲	IP29216/SRO/WG▲	800	600	600	490	170	740	540	575	370	39.0
IP45216/S/WG▲	IP45216/SRO/WG▲	1200	600	600	490	170	1140	540	975	370	52.0
IP61216/S/WG▲	IP61216/SRO/WG▲	1600	600	600	490	170	1540	540	1375	370	66.0
IP77216/S/WG▲	IP77216/SRO/WG▲	2000	600	600	490	170	1940	540	1775	370	79.0
IP77296/S/WG▲	IP77296/SRO/WG▲	2000	800	600	490	170	1940	740	1775	570	93.0
IP77218/S/WG▲	IP77218/SRO/WG▲	2000	600	800	490	170	1940	540	1775	370	99.6
IP77298/S/WG▲	IP77298/SRO/WG▲	2000	800	800	490	170	1940	740	1775	570	116.5

▲ Available on request

Monarch IP – 316 Stainless Steel

Industrial Enclosures & Switchboard Building Systems

- Suitable for small motor control applications, lighting, CT metering and smaller switchboard applications.
- Premium enclosure and switchboard building system designed to be the ultimate in flexibility.
- Conformity, Approvals:
  Lloyds Register #06/10007 (E2)
- Region D wind rated to AS1170.2-2002: Structural design actions - Wind actions
- Manufactured from 1.2/1.5mm 316 stainless steel.
- N4 surface finish or Powdercoated X15 Orange.

Comes standard with:

- 'C' rail mountings (4 rails on heights up to 800mm and 8 rails on 1200mm and above)
- Gland plate (fitted internally or externally on 400mm deep and deeper)
- Stainless steel lock with 7mm square stainless steel insert (IP020/S) on units below 1600mm high and lockable L handles (IP050) on others
- 3-point locking on units of 600mm high and above
- Removable back on units 400mm deep and deeper
- Door rails and earth strap kit

TECHNICAL DRAWINGS

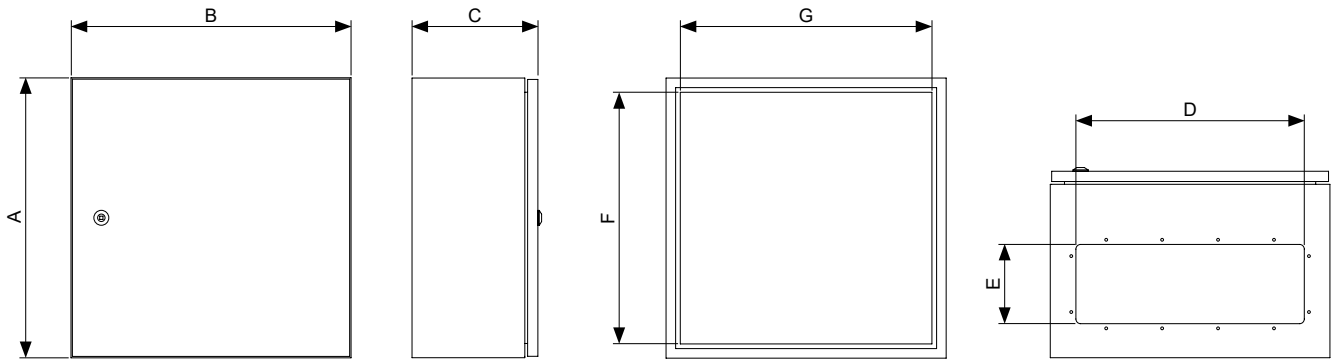

Front View | Side View | Front View Door Removed | Side View

ACCESSORIES QUICK SELECTION

Accessories	Page No.	Accessories	Page No.	Accessories	Page No.
Rainhoods	88	Escutcheon Rails	94	19" Mounting Rails	96
Gland Plates	88	Universal Rail Kits	94	Laptop Lecterns	97
Plinths	89	Door Stays	94	Document Holders	97
Vent Kits	89	Shelves	95	Schedule Holders	97
Vent Hoods	90	DIN Rails	95	Backmount Frame	97
Mounting Pans	90	Eye Bolts	95	Load Centre	97
Insulated Mounting Panels	91	Mounting Brackets	95	General Accessories	98
Double Hinged Insulating Panels	91	Standard Rails – C Section	96	Locks	99
Hinged & Fixed Escutcheons	92	Universal Rails	96	Lighting	100

ORDERING GUIDE

		Dimensions (mm)								
		External			Gland Opening		Opening			
Part Number	Part Number X15 Ripple Orange	Height (A)	Width (B)	Depth (C)	Width (D)	Depth (E)	Height (F)	Width (G)	Material Thickness (mm)	Weight (kg)
IP09051/S*		300	200	175	–	–	255	255	1.2	4.2
P13091/S		400	300	175	–	–	355	255	1.2	7.0
IP13132/S	IP13132/SRO▲	400	400	270	–	–	340	340	1.2	16.0
IP21132/S	IP21132/SRO▲	600	400	270	–	–	540	340	1.2	16.0
IP13212/S	IP13212/SRO▲	400	600	270	–	–	340	540	1.5	16.0
IP21212/S	IP21212/SRO▲	600	600	270	–	–	540	540	1.5	21.0
IP29212/S	IP29212/SRO▲	800	600	270	–	–	740	540	1.5	26.0
IP37212/S	IP37212/SRO▲	1000	600	270	–	–	940	540	1.5	31.0
IP45212/S	IP45212/SRO▲	1200	600	270	–	–	1140	540	1.5	36.0
IP21292/S	IP21292/SRO▲	600	800	270	–	–	540	740	1.5	26.0
IP13214/S	IP13214/SRO▲	400	600	400	490	170	340	540	1.5	20.0
IP21214/S	IP21214/SRO	600	600	400	490	170	540	540	1.5	25.0
IP29214/S	IP29214/SRO▲	800	600	400	490	170	740	540	1.5	31.0
IP45214/S	IP45214/SRO▲	1200	600	400	490	170	1140	540	1.5	42.0
IP61214/S	IP61214/SRO▲	1600	600	400	490	170	1540	540	1.5	53.0
IP69214/S▲	IP69214/SRO▲	1800	600	400	490	170	1740	540	1.5	59.0
IP77214/S▲	IP77214/SRO▲	2000	600	400	490	170	1940	540	1.5	65.0
IP25254/S	IP25254/SRO▲	700	700	400	490	170	640	640	1.5	31.0
IP37254/S	IP37254/SRO▲	1000	700	400	490	170	940	640	1.5	40.0
IP21294/S	IP21294/SRO▲	600	800	400	490	170	540	740	1.5	31.0
IP29294/S	IP29294/SRO▲	800	800	400	490	170	740	740	1.5	38.0
IP37294/S	IP37294/SRO▲	1000	800	400	490	170	940	740	1.5	44.0
IP45294/S	IP45294/SRO▲	1200	800	400	490	170	1140	740	1.5	51.0
IP61294/S	IP61294/SRO▲	1600	800	400	490	170	1540	740	1.5	64.0
IP69294/S	IP69294/SRO▲	1800	800	400	490	170	1740	740	1.5	71.0
IP77294/S	IP77294/SRO▲	2000	800	400	490	170	1940	740	1.5	78.0
IP77135/S▲	IP77135/SRO▲	2000	400	500	490	170	1940	740	1.5	78.0
IP21295/S▲	IP21295/SRO▲	600	800	500	490	170	540	740	1.5	35.0
IP29215/S	IP29215/SRO▲	800	600	500	490	170	740	540	1.5	35.0
IP45215/S▲	IP45215/SRO▲	1200	600	500	490	170	1140	540	1.5	47.0
IP61215/S▲	IP61215/SRO▲	1600	600	500	490	170	1540	540	1.5	60.0
IP69215/S▲	IP69215/SRO▲	1800	600	500	490	170	1740	540	1.5	66.0
IP77215/S▲	IP77215/SRO▲	2000	600	500	490	170	1940	540	1.5	72.0
IP45295/S	IP45295/SRO▲	1200	800	500	490	170	1140	740	1.5	57.0
IP61295/S	IP61295/SRO▲	1600	800	500	490	170	1540	740	1.5	71.0
IP69295/S	IP69295/SRO▲	1800	800	500	490	170	1740	740	1.5	78.0
IP77295/S	IP77295/SRO▲	2000	800	500	490	170	1940	740	1.5	85.0
IP77136/S▲	IP77136/SRO▲	2000	400	600	120	440	1940	340	1.5	73.0
IP29216/S▲	IP29216/SRO▲	800	600	600	490	170	740	540	1.5	39.0
IP45216/S	IP45216/SRO▲	1200	600	600	490	170	1140	540	1.5	52.0
IP61216/S▲	IP61216/SRO▲	1600	600	600	490	170	1540	540	1.5	66.0
IP77216/S▲	IP77216/SRO▲	2000	600	600	490	170	1940	540	1.5	79.0
IP77296/S	IP77296/SRO▲	2000	800	600	490	170	1940	740	1.5	93.0
IP77218/S▲	IP77218/SRO▲	2000	600	800	490	170	1940	540	1.5	99.6
IP77298/S▲	IP77298/SRO▲	2000	800	800	490	170	1940	740	1.5	116.5

* Does not include body rails or C rails.
▲ Available on request

Monarch IP Viewing Window – 316 Stainless Steel

Industrial Enclosures & Switchboard Building Systems

- Suitable for small motor control applications, lighting, CT metering and smaller switchboard applications.
- Premium enclosure and switchboard building system designed to be the ultimate in flexibility.
- Conformity, Approvals:
  Lloyds Register #06/10007 (E2)
- Region D wind rated to AS1170.2-2002: Structural design actions - Wind actions
- Manufactured from 1.2/1.5mm 316 stainless steel.
- N4 surface finish or Powdercoated X15 Orange.

Comes standard with:

- 'C' rail mountings (4 rails on heights up to 800mm and 8 rails on 1200mm and above)
- Gland plate (fitted internally or externally on 400mm deep and deeper)
- Stainless steel lock with 7mm square stainless steel insert (IP020/S) on units below 1600mm high and lockable L handles (IP050) on others
- 3-point locking on units of 600mm high and above
- Removable back on units 400mm deep and deeper
- Door rails and earth strap kit
- Laminated glass viewing window - 5.4mm thick

ACCESSORIES QUICK SELECTION

Accessories	Page No.	Accessories	Page No.	Accessories	Page No.
Rainhoods	88	Escutcheon Rails	94	19" Mounting Rails	96
Gland Plates	88	Universal Rail Kits	94	Laptop Lecterns	97
Plinths	89	Door Stays	94	Document Holders	97
Vent Kits	89	Shelves	95	Schedule Holders	97
Vent Hoods	90	DIN Rails	95	Backmount Frame	97
Mounting Pans	90	Eye Bolts	95	Load Centre	97
Insulated Mounting Panels	91	Mounting Brackets	95	General Accessories	98
Double Hinged Insulating Panels	91	Standard Rails – C Section	96	Locks	99
Hinged & Fixed Escutcheons	92	Universal Rails	96	Lighting	100

ORDERING GUIDE

		Dimensions (mm)									
		External			Gland Opening		Opening		Viewing Window		
Part Number	Part Number X15 Ripple Orange	Height (A)	Width (B)	Depth (C)	Width (D)	Depth (E)	Height (F)	Width (G)	Height (H)	Width (I)	Weight (kg)
IP13132/S/WG▲	IP13132/SRO/WG▲	400	400	270	–	–	340	340	185	185	16.0
IP21132/S/WG▲	IP21132/SRO/WG▲	600	400	270	–	–	540	340	375	170	16.0
IP13212/S/WG▲	IP13212/SRO/WG▲	400	600	270	–	–	340	540	175	370	16.0
IP21212/S/WG▲	IP21212/SRO/WG▲	600	600	270	–	–	540	540	375	370	21.0
IP29212/S/WG▲	IP29212/SRO/WG▲	800	600	270	–	–	740	540	575	370	26.0
IP37212/S/WG▲	IP37212/SRO/WG▲	1000	600	270	–	–	940	540	775	370	31.0
IP45212/S/WG▲	IP45212/SRO/WG▲	1200	600	270	–	–	1140	540	975	370	36.0
IP21292/S/WG▲	IP21292/SRO/WG▲	600	800	270	–	–	540	740	375	570	26.0
IP13214/S/WG▲	IP13214/SRO/WG▲	400	600	400	490	170	340	540	175	370	20.0
IP21214/S/WG▲	IP21214/SRO/WG▲	600	600	400	490	170	540	540	375	370	25.0
IP29214/S/WG▲	IP29214/SRO/WG▲	800	600	400	490	170	740	540	575	370	31.0
IP45214/S/WG▲	IP45214/SRO/WG▲	1200	600	400	490	170	1140	540	975	370	42.0
IP61214/S/WG▲	IP61214/SRO/WG▲	1600	600	400	490	170	1540	540	1375	370	53.0
IP69214/S/WG▲	IP69214/SRO/WG▲	1800	600	400	490	170	1740	540	1575	370	59.0
IP77214/S/WG▲	IP77214/SRO/WG▲	2000	600	400	490	170	1940	540	1775	370	65.0
IP25254/S/WG▲	IP25254/SRO/WG▲	700	700	400	490	170	640	640	475	470	71.0
IP37254/S/WG▲	IP37254/SRO/WG▲	1000	700	400	490	170	940	640	775	470	31.0
IP21294/S/WG▲	IP21294/SRO/WG▲	600	800	400	490	170	540	740	375	570	40.0
IP29294/S/WG▲	IP29294/SRO/WG▲	800	800	400	490	170	740	740	575	570	31.0
IP37294/S/WG▲	IP37294/SRO/WG▲	1000	800	400	490	170	940	740	775	570	38.0
IP45294/S/WG▲	IP45294/SRO/WG▲	1200	800	400	490	170	1140	740	975	570	44.0
IP61294/S/WG▲	IP61294/SRO/WG▲	1600	800	400	490	170	1540	740	1375	570	51.0
IP69294/S/WG▲	IP69294/SRO/WG▲	1800	800	400	490	170	1740	740	1575	570	64.0
IP77294/S/WG▲	IP77294/SRO/WG▲	2000	800	400	490	170	1940	740	1775	570	71.0
IP77135/S/WG▲	IP77135/SRO/WG▲	2000	800	400	490	170	1940	740	1775	170	78.0
IP21295/S/WG▲	IP21295/SRO/WG▲	600	800	500	490	170	540	740	575	370	35.0
IP29215/S/WG▲	IP29215/SRO/WG▲	800	600	500	490	170	740	540	975	370	35.0
IP45215/S/WG▲	IP45215/SRO/WG▲	1200	600	500	490	170	1140	540	1375	370	47.0
IP61215/S/WG▲	IP61215/SRO/WG▲	1600	600	500	490	170	1540	540	1575	370	60.0
IP69215/S/WG▲	IP69215/SRO/WG▲	1800	600	500	490	170	1740	540	1775	370	66.0
IP77215/S/WG▲	IP77215/SRO/WG▲	2000	600	500	490	170	1940	540	375	570	72.0
IP45295/S/WG▲	IP45295/SRO/WG▲	1200	800	500	490	170	1140	740	975	570	57.0
IP61295/S/WG▲	IP61295/SRO/WG▲	1600	800	500	490	170	1540	740	1375	570	71.0
IP69295/S/WG▲	IP69295/SRO/WG▲	1800	800	500	490	170	1740	740	1575	570	78.0
IP77295/S/WG▲	IP77295/SRO/WG▲	2000	800	500	490	170	1940	740	1775	570	85.0
IP77136/S/WG▲	IP77136/SRO/WG▲	2000	400	600	120	440	1940	340	1775	170	73.0
IP29216/S/WG▲	IP29216/SRO/WG▲	800	600	600	490	170	740	540	575	370	39.0
IP45216/S/WG▲	IP45216/SRO/WG▲	1200	600	600	490	170	1140	540	975	370	52.0
IP61216/S/WG▲	IP61216/SRO/WG▲	1600	600	600	490	170	1540	540	1375	370	66.0
IP77216/S/WG▲	IP77216/SRO/WG▲	2000	600	600	490	170	1940	540	1775	370	79.0
IP77296/S/WG▲	IP77296/SRO/WG▲	2000	800	600	490	170	1940	740	1775	570	93.0
IP77218/S/WG▲	IP77218/SRO/WG▲	2000	600	800	490	170	1940	540	1775	370	99.6
IP77298/S/WG▲	IP77298/SRO/WG▲	2000	800	800	490	170	1940	740	1775	570	116.5

▲ Available on request

Monarch IP – Aluminium

Industrial Enclosures and Switchboard Building Systems

- Suitable for small motor control applications, lighting, CT metering and smaller switchboard applications.
- Premium enclosure and switchboard building system designed to be the ultimate in flexibility.
- Conformity, Approvals:
  Lloyds Register #06/10007 (E2)
- Region D wind rated to AS1170.2-2002: Structural design actions - Wind actions
- Manufactured from 2.5mm aluminium.
- Powdercoated Light Grey RAL7035 or X15 Orange

Comes standard with:

- 'C' rail mountings (4 rails on heights up to 800mm and 8 rails on 1200mm and above)
- Gland plate (fitted internally or externally)
- 7mm square turnbuckle lock (IP020/PS) on units below 1600mm high and lockable L handles (IP050) on others
- 3-point locking on units of 600mm high and higher
- Removable back on units 400mm deep and deeper
- Rear panel is internally secured
- Door rails and earth strap kit

TECHNICAL DRAWINGS

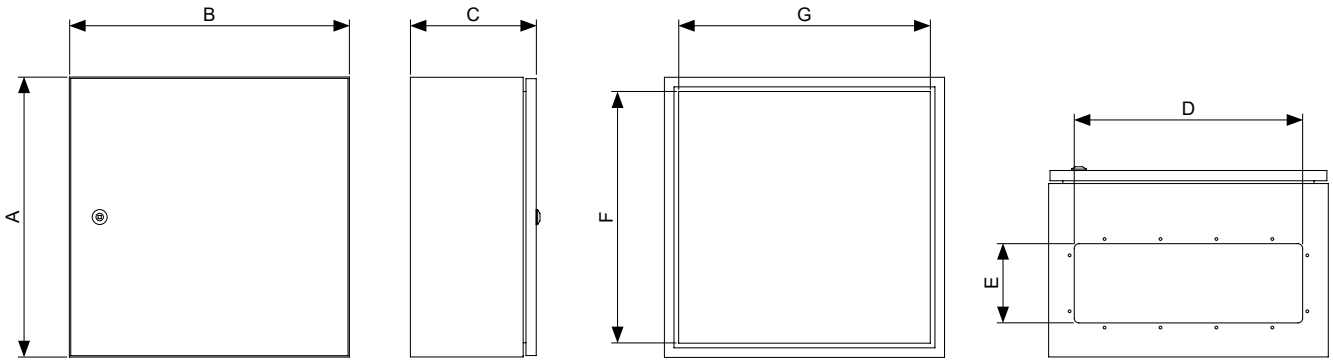

Front View | Side View | Front View Door Removed | Side View

ACCESSORIES QUICK SELECTION

Accessories	Page No.	Accessories	Page No.	Accessories	Page No.
Rainhoods	88	Escutcheon Rails	94	19" Mounting Rails	96
Gland Plates	88	Universal Rail Kits	94	Laptop Lecterns	97
Plinths	89	Door Stays	94	Document Holders	97
Vent Kits	89	Shelves	95	Schedule Holders	97
Vent Hoods	90	DIN Rails	95	Backmount Frame	97
Mounting Pans	90	Eye Bolts	95	Load Centre	97
Insulated Mounting Panels	91	Mounting Brackets	95	General Accessories	98
Double Hinged Insulating Panels	91	Standard Rails – C Section	96	Locks	99
Hinged & Fixed Escutcheons	92	Universal Rails	96	Lighting	100

ORDERING GUIDE

		Dimensions (mm)								
		External			Gland Opening		Opening			
Part Number	Part Number	Height (A)	Width (B)	Depth (C)	Width (D)	Depth (E)	Height (F)	Width (G)	Material Thickness (mm)	Weight (kg)
IP13132/A▲	IP13132/ARO▲	407	407	272	250	120	341	341	1.2	6.5
IP21132/A▲	IP21132/ARO▲	607	407	272	440	120	541	341	1.2	8.5
IP13212/A▲	IP13212/ARO▲	407	607	272	440	120	341	541	1.5	8.5
IP21212/A▲	IP21212/ARO▲	607	607	272	440	120	541	541	1.5	11.0
IP29212/A▲	IP29212/ARO▲	807	607	272	440	120	741	541	1.5	13.0
IP37212/A▲	IP37212/ARO▲	1007	607	272	440	120	941	541	1.5	15.5
IP45212/A▲	IP45212/ARO▲	1207	607	272	440	120	1141	541	1.5	18.0
IP21292/A▲	IP21292/ARO▲	607	807	272	440	120	541	741	1.5	13.0
IP13214/A▲	IP13214/ARO▲	407	607	402	490	170	341	541	1.5	11.0
IP21214/A▲	IP21214/ARO▲	607	607	402	490	170	541	541	1.5	15.0
IP29214/A	IP29214/ARO▲	807	607	402	490	170	1141	541	1.5	18.0
IP45214/A▲	IP45214/ARO▲	1207	607	402	490	170	1541	541	1.5	24.0
IP61214/A▲	IP61214/ARO▲	1607	607	402	490	170	1141	541	1.5	30.0
IP69214/A▲	IP69214/ARO▲	1807	607	402	490	170	1741	541	1.5	34.0
IP77214/A▲	IP77214/ARO▲	2007	607	402	490	170	1941	541	1.5	37.0
IP25254/A▲	IP25254/ARO▲	707	707	402	490	170	641	641	1.5	18.0
IP37254/A▲	IP37254/ARO▲	1007	707	402	490	170	941	641	1.5	22.0
IP21294/A▲	IP21294/ARO▲	607	807	402	490	170	541	741	1.5	18.0
IP29294/A▲	IP29294/ARO▲	807	807	402	490	170	741	741	1.5	21.0
IP37294/A▲	IP37294/ARO▲	1007	807	402	490	170	941	741	1.5	25.0
IP45294/A	IP45294/ARO▲	1207	807	402	490	170	1141	741	1.5	29.0
IP61294/A▲	IP61294/ARO▲	1607	807	402	490	170	1541	741	1.5	37.0
IP69294/A▲	IP69294/ARO▲	1807	807	402	490	170	1741	741	1.5	40.0
IP77294/A▲	IP77294/ARO▲	2007	807	402	490	170	1941	741	1.5	44.0
IP77135/A▲	IP77135/ARO▲	2007	407	502	490	170	741	541	1.5	21.0
IP29215/A▲	IP29215/ARO▲	807	607	502	490	170	1141	541	1.5	27.0
IP45215/A▲	IP45215/ARO▲	1207	607	502	490	170	1541	541	1.5	34.0
IP61215/A▲	IP61215/ARO▲	1607	607	502	490	170	1741	541	1.5	37.0
IP69215/A▲	IP69215/ARO▲	1807	607	502	490	170	1941	541	1.5	41.0
IP77215/A▲	IP77215/ARO▲	2007	607	502	120	250	1941	341	1.5	42.7
IP21295/A▲	IP21295/ARO▲	607	807	502	490	170	541	741	1.5	21.0
IP45295/A	IP45295/ARO▲	1207	807	502	490	170	1141	741	1.5	32.0
IP61295/A▲	IP61295/ARO▲	1607	807	502	490	170	1541	741	1.5	40.0
IP69295/A▲	IP69295/ARO▲	1807	807	502	490	170	1741	741	1.5	44.0
IP77295/A▲	IP77295/ARO▲	2007	807	502	490	170	1941	741	1.5	48.0
IP77136/A▲	IP77136/ARO▲	2007	407	602	120	440	1941	341	1.5	43.8
IP29216/A▲	IP29216/ARO▲	807	607	602	490	170	741	541	1.5	27.0
IP45216/A▲	IP45216/ARO▲	1207	607	602	490	170	1141	541	1.5	36.0
IP61216/A▲	IP61216/ARO▲	1607	607	602	490	170	1541	541	1.5	40.0
IP77216/A▲	IP77216/ARO▲	2007	607	602	490	170	1741	541	1.5	45.0
IP61296/A▲	—	1607	807	602	490	170	1541	741	1.5	43.0
IP77296/A▲	IP77296/ARO▲	2007	807	602	490	170	1941	741	1.5	53.0
IP77218/A▲	IP77218/ARO▲	2007	607	802	490	170	1941	541	1.5	59.8
IP77298/A▲	IP77298/ARO▲	2007	807	802	490	170	1941	741	1.5	68.3

▲ Available on request

Monarch IP Viewing Window - Aluminum

Industrial Enclosure & Switchboard Building System

- Suitable for small motor control applications, lighting, CT metering and smaller switchboard applications.
- Premium enclosure and switchboard building system designed to be the ultimate in flexibility.
- Conformity, Approvals:
  Lloyds Register #06/10007 (E2)
- Region D wind rated to AS1170.2-2002: Structural design actions - Wind actions
- Manufactured from 2.5mm aluminium.
- Powdercoated Light Grey RAL7035 or X15 Orange.

Comes standard with:

- 'C' rail mountings (4 rails on heights up to 800mm and 8 rails on 1200mm and above)
- Gland plate (fitted internally or externally)
- 7mm square turnbuckle lock (IP020/PS) on units below 1600mm high and lockable L handles (IP050) on others
- 3-point locking on units of 600mm high and higher
- Removable back on units 400mm deep and deeper
- Rear panel is internally secured
- Door rails and earth strap kit
- Laminated glass viewing window - 5.4mm thick

ACCESSORIES QUICK SELECTION

Accessories	Page No.	Accessories	Page No.	Accessories	Page No.
Rainhoods	88	Escutcheon Rails	94	19" Mounting Rails	96
Gland Plates	88	Universal Rail Kits	94	Laptop Lecterns	97
Plinths	89	Door Stays	94	Document Holders	97
Vent Kits	89	Shelves	95	Schedule Holders	97
Vent Hoods	90	DIN Rails	95	Backmount Frame	97
Mounting Pans	90	Eye Bolts	95	Load Centre	97
Insulated Mounting Panels	91	Mounting Brackets	95	General Accessories	98
Double Hinged Insulating Panels	91	Standard Rails – C Section	96	Locks	99
Hinged & Fixed Escutcheons	92	Universal Rails	96	Lighting	100

ORDERING GUIDE

		Dimensions (mm)									
		External			Gland Opening		Opening		Viewing Window		
Part Number	Part Number	Height (A)	Width (B)	Depth (C)	Width (D)	Depth (E)	Height (F)	Width (G)	Height (H)	Width (I)	Weight (kg)
IP13132/A/WG▲	IP13132/ARO/WG▲	407	407	272	250	120	341	341	185	185	6.5
IP21132/A/WG▲	IP21132/ARO/WG▲	607	407	272	440	120	541	341	375	170	8.5
IP13212/A/WG▲	IP13212/ARO/WG▲	407	607	272	440	120	341	541	175	370	8.5
IP21212/A/WG▲	IP21212/ARO/WG▲	607	607	272	440	120	541	541	375	370	11.0
IP29212/A/WG▲	IP29212/ARO/WG▲	807	607	272	440	120	741	541	575	370	13.0
IP37212/A/WG▲	IP37212/ARO/WG▲	1007	607	272	440	120	941	541	775	370	15.5
IP45212/A/WG▲	IP45212/ARO/WG▲	1207	607	272	440	120	1141	541	975	370	18.0
IP21292/A/WG▲	IP21292/ARO/WG▲	607	807	272	440	120	541	741	375	570	13.0
IP13214/A/WG▲	IP13214/ARO/WG▲	407	607	402	490	170	341	541	175	370	11.0
IP21214/A/WG▲	IP21214/ARO/WG▲	607	607	402	490	170	541	541	375	370	15.0
IP29214/A/WG▲	IP29214/ARO/WG▲	807	607	402	490	170	1141	541	575	370	18.0
IP45214/A/WG▲	IP45214/ARO/WG▲	1207	607	402	490	170	1541	541	975	370	24.0
IP61214/A/WG▲	IP61214/ARO/WG▲	1607	607	402	490	170	1141	541	1375	370	30.0
IP69214/A/WG▲	IP69214/ARO/WG▲	1807	607	402	490	170	1741	541	1575	370	34.0
IP77214/A/WG▲	IP77214/ARO/WG▲	2007	607	402	490	170	1941	541	1775	370	37.0
IP25254/A/WG▲	IP25254/ARO/WG▲	707	707	402	490	170	641	641	475	470	18.0
IP37254/A/WG▲	IP37254/ARO/WG▲	1007	707	402	490	170	941	641	775	470	22.0
IP21294/A/WG▲	IP21294/ARO/WG▲	607	807	402	490	170	541	741	375	570	18.0
IP29294/A/WG▲	IP29294/ARO/WG▲	807	807	402	490	170	741	741	575	570	21.0
IP37294/A/WG▲	IP37294/ARO/WG▲	1007	807	402	490	170	941	741	775	570	25.0
IP45294/A/WG▲	IP45294/ARO/WG▲	1207	807	402	490	170	1141	741	975	570	29.0
IP61294/A/WG▲	IP61294/ARO/WG▲	1607	807	402	490	170	1541	741	1375	570	37.0
IP69294/A/WG▲	IP69294/ARO/WG▲	1807	807	402	490	170	1741	741	1575	570	40.0
IP77294/A/WG▲	IP77294/ARO/WG▲	2007	807	402	490	170	1941	741	1775	570	44.0
IP77135/A/WG▲	IP77135/ARO/WG▲	807	607	502	490	170	741	541	1775	170	21.0
IP29215/A/WG▲	IP29215/ARO/WG▲	1207	607	502	490	170	1141	541	575	370	27.0
IP45215/A/WG▲	IP45215/ARO/WG▲	1607	607	502	490	170	1541	541	975	370	34.0
IP61215/A/WG▲	IP61215/ARO/WG▲	1807	607	502	490	170	1741	541	1375	370	37.0
IP69215/A/WG▲	IP69215/ARO/WG▲	2007	607	502	490	170	1941	541	1575	370	41.0
IP77215/A/WG▲	IP77215/ARO/WG▲	2007	407	502	120	250	1941	341	1775	370	42.7
IP21295/A/WG▲	IP21295/ARO/WG▲	607	807	502	490	170	541	741	375	570	21.0
IP45295/A/WG▲	IP45295/ARO/WG▲	1207	807	502	490	170	1141	741	975	570	32.0
IP61295/A/WG▲	IP61295/ARO/WG▲	1607	807	502	490	170	1541	741	1375	570	40.0
IP69295/A/WG▲	IP69295/ARO/WG▲	1807	807	502	490	170	1741	741	1575	570	44.0
IP77295/A/WG▲	IP77295/ARO/WG▲	2007	807	502	490	170	1941	741	1775	570	48.0
IP77136/A/WG▲	IP77136/ARO/WG▲	2007	407	602	120	440	1941	341	1775	170	43.8
IP29216/A/WG▲	IP29216/ARO/WG▲	807	607	602	490	170	741	541	575	370	27.0
IP45216/A/WG▲	IP45216/ARO/WG▲	1207	607	602	490	170	1141	541	975	370	36.0
IP61216/A/WG▲	IP61216/ARO/WG▲	1607	607	602	490	170	1541	541	1375	370	40.0
IP77216/A/WG▲	IP77216/ARO/WG▲	2007	607	602	490	170	1741	541	1775	370	45.0
IP61296/A/WG▲	—	1607	807	602	490	170	1541	741	1775	570	53.0
IP77296/A/WG▲	IP77296/ARO/WG▲	2007	807	602	490	170	1941	741	1775	370	59.8
IP77218/A/WG▲	IP77218/ARO/WG▲	2007	607	802	490	170	1941	541	1775	570	68.3
IP77298/A/WG▲	IP77298/ARO/WG▲	2007	807	802	490	170	1941	741	1375	570	43.0

▲ Available on request

Monarch IP

Accessories to suit all Monarch IP enclosures

Rainhoods

Rainhoods are designed to shed water from the top of the enclosure to prevent it from pooling on top of the enclosure. The rainhoods have an overhang of 14mm.

Part Number	Material	Dimensions (mm)			Slope Angle (Degrees)	To suit enclosures (mm)	
		Height	Width	Depth		Width	Depth
IPRH132▲	Zinc coated steel	30	400	284	2.0	400	270
IPRH211▲		30	600	189	3.0	600	175
IPRH212		30	600	284	2.0	600	270
IPRH214		30	600	414	1.5	600	400
IPRH215▲		30	600	514	1.0	600	500
IPRH216▲		30	600	614	1.0	600	600
IPRH254		30	700	414	1.5	700	400
IPRH292▲		30	800	284	2.0	800	270
IPRH294		30	800	414	1.5	800	400
IPRH295		30	800	514	1.0	800	500
IPRH296▲		30	800	614	1.0	800	600
IPRH051/S▲	316 stainless steel	30	200	189	3.0	200	175
IPRH091/S▲		30	300	189	3.0	300	175
IPRH132/S		30	400	284	2.0	400	270
IPRH211/S▲		30	600	189	3.0	600	175
IPRH212/S		30	600	284	2.0	600	270
IPRH214/S		30	600	414	1.5	600	400
IPRH215/S▲		30	600	514	1.0	600	500
IPRH216/S		30	600	614	1.0	600	600
IPRH254/S▲		30	700	414	1.5	700	400
IPRH292/S▲		30	800	284	2.0	800	270
IPRH294/S		30	800	414	1.5	800	400
IPRH295/S		30	800	514	1.0	800	500
IPRH296/S▲		30	800	614	1.0	800	600

▲ Available on request

Zinc coated steel rainhood on cabinet

Zinc coated steel rainhood

Gland Plates

Designed for efficient and flexible fitting and installation of cable glands.

Part Number	Material	Dimensions (mm)		Thickness	To suit enclosure (mm)	
		Width	Depth		Width	Depth
IPGP31▲	Zinc coated steel	290	160	1.6	400	270
IPGP41▲		480	160	1.6	600 or 800	270
IPGP52▲		530	210	1.6	600, 700 or 800	400, 500 or 600
IPGS31	316 stainless steel	290	160	1.5	400	270
IPGS41		480	160	1.5	600 or 800	270
IPGS52		530	210	1.5	600, 700 or 800	400, 500 or 600
IPGB31	Brass	290	160	6	400	270
IPGB41		480	160	6	600 or 800	270
IPGB52		530	210	6	600, 700 or 800	400, 500 or 600
IPGA31	Aluminium	290	160	2.5	400	270
IPGA41		480	160	2.5	600 or 800	270
IPGA52		530	210	2.5	600, 700 or 800	400, 500 or 600

▲ Available on request

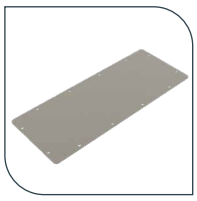

IPGP

Plinths

Designed for use when mounting enclosures on the floor.

Product	Material	Part Number	Dimensions (mm) Height	Width	Depth	To suit enclosures (mm) Width	Depth
Access plinths	Steel	IPPH214	200	600	374	600	400
		IPPH215▲	200	600	474	600	500
		IPPH216▲	200	600	574	600	600
		IPPH294	200	800	374	800	400
		IPPH295	200	800	474	800	500
		IPPH296▲	200	800	574	800	600
		IPPH295/3▲	300	800	470	800	500
	316 stainless steel	IPPH214/S	200	600	374	600	400
		IPPH215/S▲	200	600	474	600	500
		IPPH216/S▲	200	600	574	600	600
		IPPH294/S	200	800	374	800	400
		IPPH295/S	200	800	474	800	500
		IPPH296/S▲	200	800	574	800	600
Plinth	Channel iron	IPPC212	75	600	241	600	270
		IPPC214	75	600	371	600	400
		IPPC215	75	600	471	600	500
		IPPC216	75	600	571	600	600
		IPPC254	75	700	371	700	400
		IPPC294	75	800	371	800	400
		IPPC295	75	800	471	800	500
		IPPC296▲	75	800	571	800	600
		IPPC424	75	1200	371	1200	400
		IPPC425▲	75	1200	471	1200	500
		IPPC504	75	1400	371	1400	400
		IPPC505▲	75	1400	471	1400	500
		IPPC584	75	1600	371	1600	400
		IPPC585	75	1600	471	1600	500
Clamp bracket	Set of 4 (for use with channel iron plinth)	IPPCB	–	–	–	all	all
Gasket	Neoprene (4m length)	IPPC/G	3	20	–	all	all

▲ Available on request

IPPC

Vent Kits – IP23

Ensure that the enclosure does not become excessively hot by allowing natural circulation of air.
The vent kit includes a gasket, insert filter and fittings. Note that by the nature of this item, the enclosure will then not be rated to IP66.

Part Number	Material	Description	Dimensions (mm) Height	Width	To suit cutout (mm)
IPVK	Zinc coated steel	Powdercoated RAL7032	130	130	80 x 80
IPVK/LG		Powdercoated RAL7035	130	130	80 x 80
IPVK/RO		Powdercoated X15 Orange	130	130	80 x 80
IPVK16		Powdercoated RAL7032	260	260	190 x 190
IPVK16/LG▲		Powdercoated RAL7035	260	260	190 x 190
IPVK16/RO▲		Powdercoated X15 Orange	260	260	190 x 190
IPVK/S	316 stainless steel	–	130	130	80 x 80
IPVK/SRO▲		Powdercoated X15 Orange	130	130	80 x 80
IPVK16/S▲		–	260	260	190 x 190
IPVK16/SRO▲		Powdercoated X15 Orange	260	260	190 x 190
IPVK/A	Aluminium	Powdercoated RAL7035	130	130	80 x 80
IPVK16/A▲			260	260	190 x 190

▲ Available on request

IPVK

Monarch IP

Accessories to suit all Monarch IP enclosures

Vent Hoods

Designed to suit B&R's range of fans, filters and vent kits (on selected sizes) to ensure that the fan is protected mechanically and to protect from water and dust ingress.

Part Number	Material	Colour	Dimensions (mm)			To suit
			Height	Width	Depth	
IPVH12	Zinc coated steel	Pebble Grey RAL7032	300	200	50	FAN/FIL12 & IPVK
IPVH12/LG▲		Light Grey RAL7035	300	200	50	FAN/FIL12 & IPVK
IPVH12/RO		X15 Orange	300	200	50	FAN/FIL12 & IPVK
IPVH25		Pebble Grey RAL7032	400	300	50	FAN23/28 & FAN/FIL25
IPVH25/LG▲		Light Grey RAL7035	400	300	50	FAN23/28 & FAN/FIL25
IPVH25/RO		X15 Orange	400	300	50	FAN23/28 & FAN/FIL25
IPVH35		Pebble Grey RAL7032	475	375	75	FAN/FIL35
IPVH35/LG▲		Light Grey RAL7035	475	375	75	FAN/FIL35
IPVH35/RO▲		X15 Orange	475	375	75	FAN/FIL35
IPVH12/S	316 stainless steel	N4 finish	300	200	50	FAN/FIL12 & IPVK/S
IPVH12/SRO▲		X15 Orange	300	200	50	FAN/FIL12 & IPVK/S
IPVH25/S		N4 finish	400	300	50	FAN23/28 & FAN/FIL25
IPVH25/SRO		X15 Orange	400	300	50	FAN23/28 & FAN/FIL25
IPVH35/S		N4 finish	475	375	75	FAN/FIL35
IPVH35/SRO▲		X15 Orange	475	375	75	FAN/FIL35
IPVH12/A▲	Aluminium	Light Grey RAL7035	300	200	50	FAN/FIL12 & IPVK
IPVH25/A▲			400	300	50	FAN23/28 & FAN/FIL25
IPVH35/A▲			475	375	75	FAN/FIL35

▲ Available on request

IPVH on cabinet

Metal Mounting Pans

Very simple to install using the rails supplied as part of the Monarch IP enclosure. They are manufactured from 2mm thick pre-treated mild steel with a gloss white powdercoat finish.

Part Number	Dimensions (mm)			To suit enclosure (mm)	
	Height	Width	Thickness	Height	Width
IPMP0905	250	150	2	300	200
IPMP1309	350	250	2	400	300
IPMP1313	320	340	2	400	400
IPMP1321	320	540	2	400	600
IPMP2113	520	340	2	600	400
IPMP2121	520	540	2	600	600
IPMP2129	520	740	2	600	800
IPMP2525	620	640	2	700	700
IPMP2921#	720	540	2	800	600
IPMP2929#	720	740	2	800	800
IPMP3721#	920	540	2	1000	600
IPMP3725#	920	640	2	1000	700
IPMP3729#	920	740	2	1000	800
IPMP4521#	1120	540	2	1200	600
IPMP4529#	1120	740	2	1200	800
IPMP5321▲	1320	540	2	1400	600
IPMP5329▲	1320	740	2	1400	800
IPMP6121*	1520	540	2	1600	600
IPMP6129*	1520	740	2	1600	800
IPMP6921*	1720	540	2	1800	600
IPMP6929*	1720	740	2	1800	800
IPMP7721*	1920	540	2	2000	600
IPMP7729*	1920	740	2	2000	800

* Mounting pan features double return on sides and single return on top for extra rigidity.
\# Mounting pan features single return on sides.
▲ Available on request.

IPMP detail

IPMP application

Insulated Mounting Pans

Suitable where use of a metallic pan is not acceptable. Manufactured from black laminated phenolic material and supplied with all fixings, the insulated mounting pan is easy to install and use.

	Dimensions (mm)			To suit enclosure (mm)	
Part Number	Height	Width	Thickness	Height	Width
IPFP0905▲	250	150	6	300	200
IPFP1309▲	350	250	6	400	300
IPFP1313	320	340	6	400	400
IPFP1321▲	320	540	6	400	600
IPFP2113▲	520	340	6	600	400
IPFP2121	520	540	6	600	600
IPFP2129▲	520	740	6	600	800
IPFP2525▲	620	640	6	700	700
IPFP2921	720	540	6	800	600
IPFP2929▲	720	740	6	800	800
IPFP3721▲	920	540	6	1000	600
IPFP3725▲	920	640	8	1000	700
IPFP3729▲	920	740	8	1000	800
IPFP4521▲	1120	540	8	1200	600
IPFP4529▲	1120	740	8	1200	800

▲ Available on request

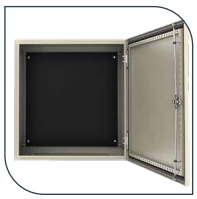

IPFP

Double Hinged Insulating Panels

Mainly used for metering applications. They are functional mounting solution for equipment installation that provides full access to the rear of the panel.

	Dimensions (mm)			To suit enclosure (mm)	
Part Number	Height	Width	Thickness	Height	Width
IPHP1313	320	325	6	400	400
IPHP1321	320	525	6	400	600
IPHP2113	520	325	6	600	400
IPHP2121	520	525	6	600	600
IPHP2129	520	725	6	600	800
IPHP2421	595	525	6	partial height	600
IPHP2429	595	725	6	partial height	800
IPHP2525	620	625	6	700	700
IPHP2921	720	525	6	800	600
IPHP2929	720	725	6	800	800
IPHP3221▲	795	525	6	partial height	600
IPHP3229	795	725	6	partial height	800
IPHP3721	920	525	6	1000	600
IPHP3725▲	920	625	8	1000	700
IPHP3729	920	725	8	1000	800
IPHP4521	1120	525	8	1200	600
IPHP4529	1120	725	8	1200	800

▲ Available on request

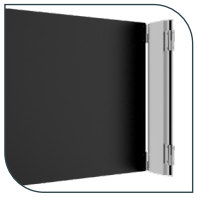

IPHP

Monarch IP

Accessories to suit all Monarch IP enclosures

Hinged Escutcheons

Used for covering internal controls and accessories. They can be mounted singularly or with two or more fitted into the enclosure. Fitting requires universal rail kit (see page 28).

	Dimensions (mm)				To suit enclosures (mm)	
Part Number	Height	Width	Depth	Required (rail kit)	Height	Width
IPHE1313	325	320	18	IPRK1313	400	400
IPHE1321	325	520	18	IPRK1321	400	600
IPHE1329	325	720	18	IPRK1329	400	800
IPHE1621	400	520	18		400	600
IPHE1629	400	720	18		400	800
IPHE2021	500	520	18		400	600
IPHE2029	500	720	18		400	800
IPHE2113	525	320	18	IPRK2113	600	400
IPHE2121	525	520	18	IPRK2121	600	600
IPHE2129	525	720	18	IPRK2129	600	800
IPHE2421	600	520	18		partial	600
IPHE2429	600	720	18		partial	800
IPHE2525	625	620	18	IPRK2525	700	700
IPHE2921	725	520	18	IPRK2921	800	600
IPHE2929	725	720	18	IPRK2929	800	800
IPHE3221	800	520	18		partial	600
IPHE3229	800	720	18		partial	800
IPHE3721	925	520	18	IPRK3721	1000	600
IPHE3725	925	620	18	IPRK3725	1000	700
IPHE3729	925	720	18	IPRK3729	1000	800
IPHE4021	1000	520	18		1000	600
IPHE4029	1000	520	18		1000	800
IPHE4521	1125	520	18	IPRK4521	1200	600
IPHE4529	1125	720	18	IPRK4529	1200	800
IPHE5321	1325	520	18	IPRK5321	1200	600
IPHE5329	1325	720	18	IPRK5329	1200	800
IPHE6121	1525	520	18	IPRK6121	1600	600
IPHE6129	1525	720	18	IPRK6129	1600	800
IPHE6921	1725	520	18	IPRK6921	1800	600
IPHE6929	1725	720	18	IPRK6929	1800	800
IPHE7721	1925	520	18	IPRK7721	2000	600
IPHE7729	1925	720	18	IPRK7729	2000	800

IPHE

Full height hinged escutcheons are incompatible with door stays

Fixed Esutcheons

Used for covering internal controls and accessories. They form a second tier mounting arrangement, in front of the mounting pan. They can be mounted singularly or with two or more fitted into the enclosure. Fitting requires universal rail kit (see page 28).

	Dimensions (mm)				To suit enclosures (mm)	
Part Number	Height	Width	Depth	Required (rail kit)	Height	Width
IPFE0908	225	200	18		–	–
IPFE0913	225	325	18		–	400
IPFE0916	225	400	18		–	–
IPFE0921	225	525	18		–	600
IPFE0929	225	725	18		–	800
IPFE1208	300	200	18		–	–
IPFE1213	300	325	18		400	400
IPFE1216	300	400	18		400	400
IPFE1221	300	525	18		–	600
IPFE1229	300	725	18		–	800
IPFE1308▲	325	200	18	–	–	–

▲ Available on request

Cont.

Fixed Esutcheons Cont.

	Dimensions (mm)				To suit enclosures (mm)	
Part Number	Height	Width	Depth	Required (rail kit)	Height	Width
IPFE1313	325	325	18	IPRK1313	400	400
IPFE1316▲	325	400	18	–	–	–
IPFE1321	325	525	18	IPRK1321	400	600
IPFE1329	325	725	18	–	400	800
IPFE1608	400	200	18		–	–
IPFE1613	400	325	18		–	400
IPFE1616▲	400	400	18	–	–	–
IPFE1621	400	525	18		–	600
IPFE1629	400	725	18		–	800
IPFE2008	500	200	18		–	–
IPFE2013	500	325	18		–	400
IPFE2016	500	400	18		–	–
IPFE2021	500	525	18		–	600
IPFE2029	500	725	18		–	800
IPFE2108	525	200	18	–	600	–
IPFE2113	525	325	18	IPRK2113	600	400
IPFE2116	525	400	18	–	600	–
IPFE2121	525	525	18	IPRK2121	600	600
IPFE2129	525	725	18	IPRK2129	600	800
IPFE2408	600	200	18	–	–	–
IPFE2413	600	325	18	–	–	–
IPFE2416	600	400	18	–	–	–
IPFE2421	600	525	18	–	–	–
IPFE2429	600	725	18	–	–	–
IPFE2525▲	625	625	18	IPRK2525	700	700
IPFE2908	725	200	18	–	800	–
IPFE2913	725	325	18		800	400
IPFE2916	725	400	18	–	800	–
IPFE2921	725	525	18	IPRK2921	800	600
IPFE2929	725	725	18	IPRK2929	800	800
IPFE3208	800	200	18	–	–	–
IPFE3213	800	325	18	–	–	–
IPFE3216	800	400	18	–	–	–
IPFE3221	800	525	18	–	–	–
IPFE3229	800	725	18	–	–	–
IPFE3708	925	200	18	–	–	–
IPFE3713	925	325	18	–	–	–
IPFE3716	925	400	18	–	–	–
IPFE3721	925	525	18	IPRK3721	1000	600
IPFE3725▲	925	625	18	IPRK3725	1000	700
IPFE3729	925	725	18	IPRK3729	1000	800
IPFE4008	1000	200	18		–	–
IPFE4013	1000	325	18		–	400
IPFE4016	1000	400	18		–	–
IPFE4021	1000	525	18		–	600
IPFE4029	1000	725	18		–	800
IPFE4508	1125	200	18	–	–	–
IPFE4513▲	1125	325	18	–	1200	400
IPFE4516▲	1125	400	18	–	–	–
IPFE4521	1124	524	18	IPRK4521	1200	600
IPFE4529	1124	724	18	IPRK4529	1200	800

▲ Available on request

Monarch IP

Accessories to suit all Monarch IP enclosures

Escutcheon Rails

Used where two escutcheons meet in the enclosures.

Part Number	Description	Height (mm)
IPEJ▲	Pack of 10	joining bracket
IPER05	–	525
IPER07	–	725
IPER19	–	1975

▲ Available on request

IPER

Universal Rail Kits

Used to install both fixed and hinged escutcheons and complete with 4 rails and fixings. A pair of height rails and a pair of width rails are provided in each kit.

	Rail lengths (mm)		To suit enclosures (mm)	
Part Number	Rail Height	Rail Width	Height	Width
IPRK1313	375	325	400	400
IPRK1321	375	525	400	600
IPRK1329	375	725	400	800
IPRK2113	575	325	600	400
IPRK2121	575	525	600	600
IPRK2129	575	725	600	800
IPRK2525▲	675	625	700	700
IPRK2921	775	525	800	600
IPRK2929	775	725	800	800
IPRK3721	975	525	1000	600
IPRK3725	975	625	1000	700
IPRK3729	975	725	1000	800
IPRK4521	1175	525	1200	600
IPRK4529	1175	725	1200	800
IPRK6121	1575	525	1600	600
IPRK6129	1575	725	1600	800
IPRK6921	1775	525	1800	600
IPRK6929	1775	725	1800	800
IPRK7721	1975	525	2000	600
IPRK7729	1975	725	2000	800

▲ Available on request

IPRK

Door Stays

Ensures door remains open even in windy weather ensuring the safety of people working on the installed equipment.

Part Number	Quantity	To suit enclosure width (mm)
IPDS	1	All enclosures 600mm and wider

Full height hinged escutcheons are incompatible with door stays

IPDS

Shelves

White powdercoated shelving comes complete with knockout for cabling and all fittings. Designed for use as segregation panels for switchboard applications mounting fixed equipment.

	Dimensions (mm)		To suit enclosures (mm)	
Part Number	Width	Depth	Width	Depth
IPSH211▲	563	105	600	175
IPSH212	563	160	600	270
IPSH214	563	280	600	400
IPSH215	563	380	600	500
IPSH216	563	480	600	600
IPSH254▲	663	280	700	400
IPSH292▲	763	160	800	270
IPSH294	763	280	800	400
IPSH295	763	380	800	500
IPSH296	763	480	800	600

▲ Available on request

STATIC UDL
200kg

IPSH

These shelves are NOT designed for load during transport.

DIN Rails

Used for mounting DIN switchgear and accessories into the enclosure. It is available for all models in aluminium, steel and slotted designs.

			Dimensions (mm)	
Part Number	Material	Description	Length	Depth
IPDN03	Aluminium	–	360	15
IPDN05▲			560	15
IPDN07▲			760	15
DIN35/7.5	Steel	–	2000	7.5
DIN35/7.5SL	Steel slotted	–	2000	7.5
DIN35/15AL15	Aluminium	–	1500	15
DINSB	–	Mounting kit, angle support brackets	–	–

▲ Available on request

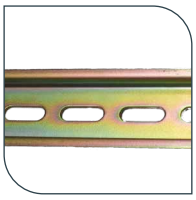
DIN35/7.5SL

Eye Bolts

Ensures enclosure is not damaged when lifted and can be moved safety. Compliant to AS4991:Lifting Devices.

Part Number	Quantity	Lift Rating	To suit enclosure width (mm)
LEB/12	2	125kg per bolt	all

LEB/12

Mounting Brackets

For ease of installation and fixing to the mounting surface. Mounting brackets ensure optimum installation and safety.

Part Number	Material	Quantity	To suit enclosure width (mm)
MEB/S	Stainless steel	4	all
IPWM	Zinc coated steel	4	all
IPWM/S	Stainless steel	4	all

MEB/S

Monarch IP

Accessories to suit all Monarch IP enclosures

Standard Rails – C Section

Used to fit additional accessories and rails in the enclosure.

Part Number	Description	Height (mm)	To suit enclosure depth (mm)
IPCR01▲		137	–
IPCR02		232	270
IPCR03		360	400
IPCR04		460	500
IPCR05		560	600
IPCR07		760	800
IPCR12	For loose supply (customer cut to length)	1200	–
IPTO	Takeoff bracket (pack of 10)	–	–

▲ Available on request

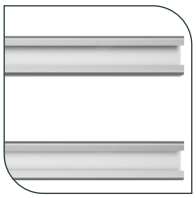

IPCR

IPTO

Universal Rails

Designed for mounting equipment inside an enclosure. Either fixed lengths or can be cut to size requirements.

Part Number	Description	Length (mm)	To suit enclosure height (mm)
IPUV	25 pitch	1975	all
UV1▲	20 pitch	1984	all

▲ Available on request

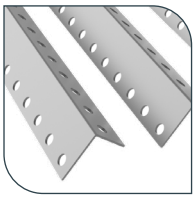

IPUV

19" Mounting Rails

Designed for mounting equipment inside an enclosure. Either fixed lengths or can be cut to size requirements.

	Dimensions (mm)			To suit enclosures (mm)	
Part Number	Height	Width	Depth	Height	Width
UV19	1946	58.5	76	–	600
IPRU11	536	–	–	600	
IPRU15	758	–	–	800	
IPRU24	1158	–	–	1200	
IPRU32▲	1469	–	–	1600	
IPRU38▲	1736	–	–	1800	
IPRU42▲	1958	–	–	2000	
IPRU11/800▲	536	–	–	600	800
IPRU15/800▲	758	–	–	800	
IPRU24/800▲	1158	–	–	1200	
IPRU32/800▲	1469	–	–	1600	
IPRU38/800▲	1736	–	–	1800	
IPRU42/800▲	1958	–	–	2000	

▲ Available on request

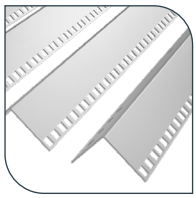

IPRU

Monarch IP

Accessories to suit all Monarch IP enclosures

Laptop Lecterns

Designed to allow fast and easy access when using a laptop computer. The laptop lectern protrudes 45mm inside the door. Mounting requires door rails (purchased seperately).

		Dimensions (mm)		To suit door (mm)	
Part Number	Description	Width	Depth	Height	Width
IPLL▲	Laptop lectern	440	300	600 & above	600 & above
IPRD6▲	Door rails (set of 2)	–	–	–	600
IPRD8▲		–	–	–	800

▲ Available on request

IPLL

Document Holders

Designed to standard A4 documents such as procedures and diagrams to ensure that they are kept clean and conveniently located.

Part Number	Description	To suit enclosure width (mm)
IPPLN	A4 Plastic	all
IPPLN04/35	A4 Metal	400 & above
IPPLN04/80▲	A4 Metal – Folder	400 & above
IPPLN06/15	A3	600 & above
IPPLN06/35▲	A3 Metal	600 & above
IPPLN06/80▲	A3 Metal – Folder	600 & above

▲ Available on request.

IPPLN

Schedule Holders

Used to ensure maintenance schedules are always displayed prominently.

				Dimensions (mm)			To suit enclosure (mm)	
Part Number	Description	Mounting	Colour	Height	Width	Depth	Height	Width
IPLC150▲	150 line	Door rail	Pebble Grey RAL7032	255	210	–	400	300
IPLC40▲	40 line			230	110	–	300	200
LCH40	40 line	Tape or rivets	Light Grey RAL7035	230	110	8	300	200
LCH60	60 line			260	210	8	400	300
LCH78▲	78 line			380	110	8	500	200

▲ Available on request

IPLC

Backmount Frame

Part Number	Description	Height (RU)
FCCD15/19*▲	15-Way, 19 inch	3

▲ Available on request
* 19 inch mounting rails required refer to page 88.

FCCD15/19

Load Centre

Part Number	Description	Height (RU)
FCLC19/19*	19-pole, 19 inch	5

* 19 inch mounting rails required refer to page 88.

FCLC19/19

Monarch IP

Accessories to suit all Monarch IP enclosures

General Accessories

A range of general accessories to suit all Monarch IP enclosures.

Part Number	Product	Description
IPNLK▲	Night latch kit bracket	To enable Lockwood deadbolt to be fitted
IPP06▲	Hole plug (pack of 20)	M6
IPP10▲		M10
IPP13▲		M13
IPBO612	Bolt – hex head (pack of 20)	M6 x 12mm
IPBO625		M6 x 25mm
IPBO812		M8 x 12mm
IPBO825		M8 x25mm
IPBO830▲		M8 x 30mm
IPBO0840/D▲	Accessory kit seal screw (pack of 10)	M8 x 40
IPN06▲	Hex head nuts (pack of 20)	M6
IPN08▲		M8
IPCG06	Cage Nuts (pack of 20)	M6
IPCG08		M8
IPCN06	Foam back nuts (pack of 20)	M6
IPCN08		M8
IPTO616▲	Screws – taptite (pack of 20)	M6 x 16mm
IPTPO616/S▲	Tamper proof screws with security bit	M6 x 16mm (pack of 10)
IPWF06▲	Flat washers (pack of 20)	M6
IPWF08▲		M8
IPWG06	Seal washers (pack of 20)	Small
IPWS06▲	Star washers (pack of 20)	M6
IPWS08		M8
IPWSP06	Spring washers (pack of 20)	M6
IPWSP08		M8
IPOR06▲	Sealing ring (pack of 20)	M6
IPCDH▲	D handle	Chrome
ECESK▲	Earth strap kit	–
IPZRLG▲	Z Rail	760mm
TUP/P20	Touch Up Paint (300g)	Pebble Grey RAL7032
TUP/P29		Light Grey RAL7035

▲ Available on request

Locks

Locks to suit Monarch IP enclosures

Standard Locks

Enclosure	Zinc Coated Steel	Stainless Steel	Aluminium
≤1600mm	IP020 – chromed steel lock with 7mm square steel insert	IP020/S – black powdercoated lock with 7mm square stainless steel insert	IP020/PS – chromed steel lock with 7mm square steel insert
+1600mm	IP050 – lockable L handle keyed 92268	IP050 – lockable L handle keyed 92268	IP050 – lockable L handle keyed 92268

Lock Options for Monarch IP Enclosures

There are a number of lock options available that are suitable for use on Monarch IP enclosures. Contact your local sales representative to discuss your requirements.

Product	Description	Part Number	Standard Lock/Insert	Alternative insert	Keys: Lockable handles	Keys: Zinc, 4-way
Turnbuckle	chromed steel	IP020	7mm square – steel	See below		SKZ
	powdercoated	IP020/PS	7mm square – stainless steel	See below		SKZ
	stainless steel	IP020/S	7mm square – stainless steel	See below		SKZ
		IP028S/S	8mm square slotted – stainless steel	See below		
Wing knob	lockable	IP030	Key code 92268		SK3	
	lockable	IP030/CL001	Key code CL001			
	lockable	IP030/L003	Key code L003			
	padlockable	IP032	Suit 8mm hasp			
	padlockable - stainless steel	IP032/S	Suit 8mm hasp			
	non-lockable	IP111	–			
T-handle	lockable	IP040	Key code 92268		SK3	
L-handle	lockable	IP050	Key code 92268		SK3	
	lockable – stainless steel	IP050/S	Key code 92268		SK3	
	padlockable – steel	IP052	–			
	padlockable – stainless steel	IP052/S	–			
Swing handle	padlockable – steel	IP060	Suitable for up to 9mm diameter pad-lock shackle.			
	padlockable – stainless steel	IP060/S				

020

020/PS

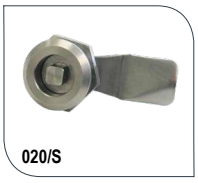
020/S

028S/S

030

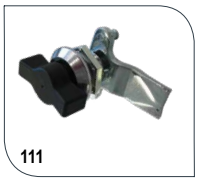
111

040

050

052

052/S

060

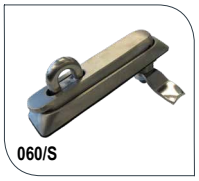
060/S

Lock Inserts for IP020 Locks

The IP020 locks are available with an option lock insert for use on all Monarch IP enclosures. Contact your local sales engineer to discuss your requirements.

To suit lock style	Description	To suit lock	Standard Insert	3mm double bit pin: Steel	3mm double bit pin: Stainless Steel	8mm square: Steel	8mm square: Stainless Steel	8mm square slotted: Stainless Steel	8mm triangle: Steel	8mm triangle: Stainless Steel
Turnbuckle	chromed steel	IP020	7mm square – steel	LKINS3P		LKINS8S		LKINS8SS/S	LKINS8T	
	powdercoated with SS insert	IP020/PS	7mm square – stainless steel		LKINS3P/S		LKINS8S/S	LKINS8SS/S		LKINS8T/S
	stainless steel	IP020/S	7mm square – stainless steel		LKINS3P/S		LKINS8S/S	LKINS8SS/S		LKINS8T/S
Key required – zinc			SKZ	SKZ	SKZ	SKZ	SKZ	SKZ	SKZ	SKZ

Enclosure LED Lighting

Our LED lighting solutions provide light inside an enclosure when visibility is required for both safety and efficacy.

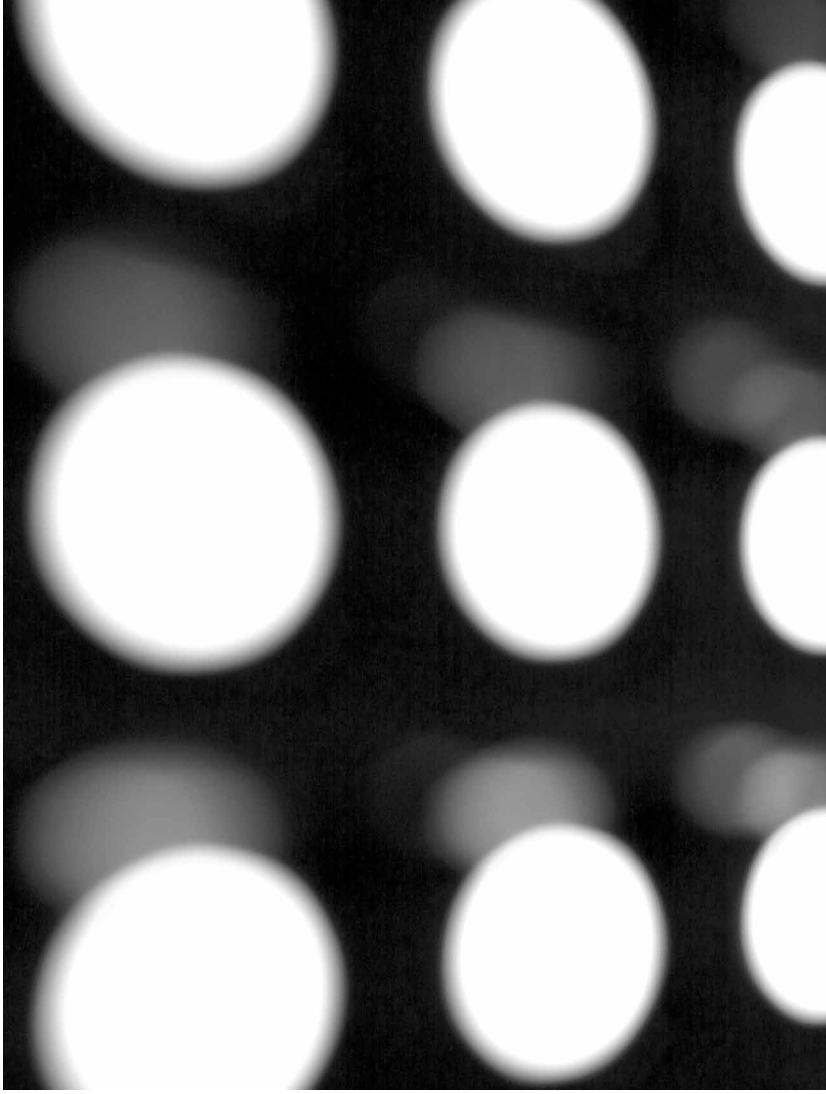

Compact, high-output LED lighting designed to enhance visibility within enclosures and rack systems. Up to four light units can be daisy chained from a single power supply, with linking capability of up to 36W per run. Lights can be mounted directly to 19” rack rails, with optional mounting kits available for enclosures without rack rails.

When roof-mounted, the slim-profile design allows unobstructed operation of full-height swing frames and hinged escutcheons. An optional PIR motion sensor provides automatic switching for improved energy efficiency.

- Energy saving up to 50% compared with traditional fluorescents under the same lux.
- Life span – over 50,000 hours
- Available in cool white, neutral white and warm white colour temperatures.
- Available in 12V and 24V options.
- Easy linking up to 36 watts per run.
- Easy to install.
- Low voltage — safe and efficient.
- Manufactured from aluminium with black plastic end caps and acrylic lens.
- Light source – SM3528 LED
- Operating temperature – -20ºC to 40ºC indoors

This information is provided as a guide only. Contact your local sales representative to discuss your requirements.

Technical Operating Data

Length (mm)	Voltage (DC)	Power (W)	Radiance	Colour Temp	Luminous Flux (lm)*	LED Current (A)
300	12/24	3	90º	4400	280/360	0.18
500	12/24	5	90º	4400	460/600	0.18

Universal Double Door

		Inclusions					Required Mounting Bracket		To suit enclosure	
Part Number	Power (V)	LED Light	Power Supply	Splitter	Switch	Connectors	DDLKB10	DDLKB12	Width (mm)	Optional
BRLED500	12	•	•		•		•		1000	BRMOT
BRLED500/24	24	•	•		•			•	1200	PIR Motion Sensor

Bowen Series

		Inclusions					Required Mounting Bracket			To suit enclosure	
Part Number	Power (V)	LED Light	Power Supply	Splitter	Switch	Connectors	BWLKB04	BWLKB06	BWLKB08	Width (mm)	Optional
BRLED300	12	•	•		•		•			400	BRMOT PIR Motion Sensor
BRLED300/24	24	•	•		•		•			400	
BRLED500	12	•	•		•			•	•	600 or 800	
BRLED500/24	24	•	•		•			•	•	600 or 800	
BRLEDK03	–	•		•		•	•			400	
BRLEDK05	–	•		•		•		•	•	600 or 800mm	

Pilbara SP

		Inclusions					Required Mounting Bracket			To suit enclosure	
Part Number	Power (V)	LED Light	Power Supply	Splitter	Switch	Connectors	IPLKB04	SPLKB05	IPLKB08	Width (mm)	Optional
BRLED300	12	•	•		•		•			400	BRMOT PIR Motion Sensor
BRLED300/24	24	•	•		•		•			400	
BRLED500	12	•	•		•			•	•	500 or 800	
BRLED500/24	24	•	•		•			•	•	500 or 800	
BRLEDK03	–	•		•		•	•			400	
BRLEDK05	–	•		•		•		•	•	800	

Monarch IP

		Inclusions					Required Mounting Bracket			To suit enclosure	
Part Number	Power (V)	LED Light	Power Supply	Splitter	Switch	Connectors	IPLKB04	IPLKB06	IPLKB08	Width (mm)	Optional
BRLED300	12	•	•		•		•			400	BRMOT PIR Motion Sensor
BRLED300/24	24	•	•		•		•			400	
BRLED500	12	•	•		•			•	•	600 or 800	
BRLED500/24	24	•	•		•			•	•	600 or 800	
BRLEDK03	–	•		•		•	•			400	
BRLEDK05	–	•		•		•		•	•	600 or 800mm	

Power Case

Lockable Segregation Enclosure

PEARL GLOSS WHITE

- Prevents contact with live parts, reducing the risk of electric shock.
- Segregates high voltage energised components for safer maintenance.
- Provides additional protection of energised components from physical impact.
- Compliant with industrial and mining standards
- Compatible with mounting pans on any B&R mining solutions enclosure, including Monarch IP, Universal NI, Incline SR, Finucane FI, Lambert LB, Bowen Series and Hedland PH.
- Manufactured from 1.6mm zinc coated steel
- Powder coated Pearl Gloss White
- Standard Inclusions: lockable wing knob and gas strut

Power cases are compatible with mounting pans on Monarch IP, Universal NI, Incline SR, Finucane FI, Lambert LB, Bowen Series and Hedland PH. Contact your local sales representative to discuss your requirements.

ORDERING GUIDE

Part Number		Dimensions (mm)		
		Height	Width	Depth
LPC221	Pearl Gloss White	233	215	167
LPC231	Pearl Gloss White	233	315	167
LPC261	Pearl Gloss White	233	615	167

* Designed for use with pad locks with an 8mm hasp

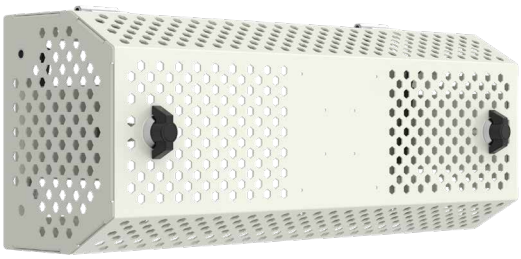

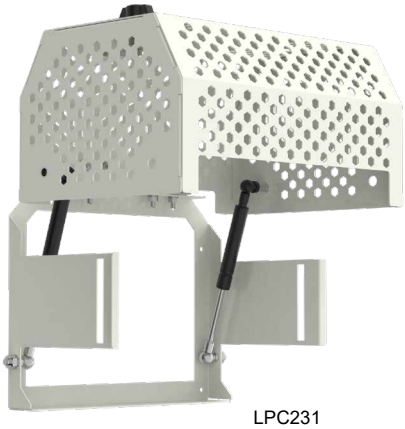

LPC231

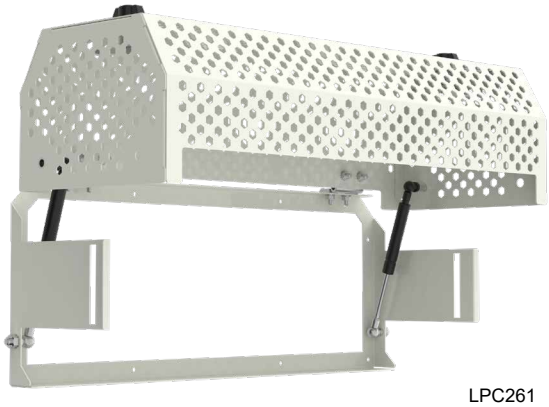

LPC261

Project Profile

Oyu Tolgoi Mine Gobi Desert, Mongolia

The Oyu Tolgoi Mine, located in Mongolia's South Gobi Desert, is one of the world's largest copper and gold mining operations. Owned by the Government of Mongolia and Turquoise Hill Resources, and managed by Rio Tinto, the project expanded from open pit to underground mining to access deeper ore reserves.

As part of the underground expansion, Jacobs Engineering was appointed to deliver the material handling infrastructure and engaged ABB to supply PLC panels, local control stations and custom power distribution boards for use across the mine. Based on its longstanding relationship with ABB and proven performance on previous projects, B&R Enclosures was selected to manufacture and wire these systems.

B&R delivered complete enclosure solutions from its Australian and Suzhou manufacturing facilities, providing electrical integration, engineering, project management and assembly services. The project required equipment suitable for a range of harsh operating environments, including outdoor, underground and indoor installations.

Customised enclosure solutions were developed using B&R's Bowen, Monarch IP and iLINQ product ranges. Outdoor and underground applications utilised 316 stainless steel enclosures with IP66 protection and sloping roof designs to minimise water and sediment build-up, while indoor installations used modified iLINQ cabinets and Monarch IP enclosures to meet the project's environmental and cable entry requirements.

Working closely with ABB and Jacobs Engineering, B&R also engineered compact custom power distribution boards that met strict dimensional requirements while incorporating dedicated field terminals, integrated testing facilities and robust ingress protection for demanding mining conditions.

The successful delivery of fit-for-purpose enclosure solutions reinforced B&R's strong partnerships with ABB, Jacobs Engineering and Rio Tinto, demonstrating its capability to provide engineered enclosure systems for large-scale mining infrastructure projects.

Field FC

Industrial Field Enclosures

- Suitable for housing ITS equipment, GPS receivers / transmitters, road monitoring / traffic management in infrastructure applications.
- Designed to protect electronic equipment in outdoor and isolated locations.
- Has been specifically designed to minimise vandalism.
- Region D wind rated to AS1170.2-2002: Structural design actions – Wind actions.
- Flush front and rear doors with concealed hinges.
- Sunshield roof to minimise the effects of solar radiation.
- Conformity, Approvals:
  Lloyds Register #06/10007 (E2)
- Manufactured from 2mm thick zinc coated steel, 1.5mm thick 316 stainless steel or 2mm thick aluminium.
- Powdercoated Smoke Blue T33 or N4 surface finish.

Comes standard with:

- Enclosure frame
- Front and rear door
- Sunshield roof
- 3mm aluminium gland plates
- 100mm high plinth – stainless steel
- Eye bolts
- Vertical mounting posts

ORDERING GUIDE

Part Number			Dimensions (mm)						
			External			Front Opening		Side Opening	
Zinc coated steel	316 stainless steel	Aluminium	Height (A)	Width (B)	Depth (C)	Height (D)	Width (E)	Height (F)	Width (G)
FC130706▲	FC130706/S▲	FC130706/A▲	1375	755	620	1085	640	1095	440
FC160706▲	FC160706/S▲	FC160706/A▲	1675	755	620	1385	640	1395	440
FC190706▲	FC190706/S▲	FC190706/A▲	1975	755	620	1685	640	1695	440
FC220706▲	FC220706/S▲	FC220706/A▲	2275	755	620	1985	640	1995	440

▲ Available on Request

ACCESSORIES QUICK SELECTION GUIDE

Accessories	Page No.
Cladding	106
Ventilated shelves	106
Baying Kit	107
Rails & Brackets	107
General Accessories	107

TECHNICAL DRAWINGS

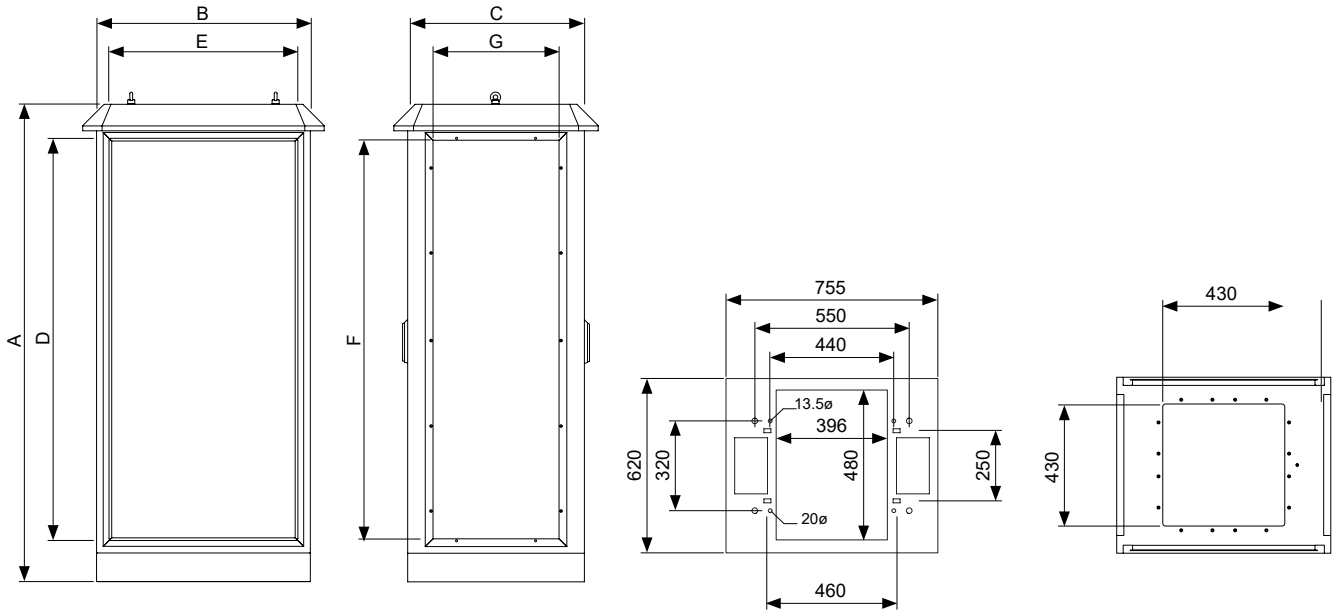

Front View | Side View | Bottom View | Cable Entry

1 **Select your enclosure size from the ordering guide.**
The ordering guide is categorised by depth (with subsequent widths and depths shown in the dimension table). The table is incremented from smallest to largest height.

2 **Select your cladding size.**
Select from the table (the relevant part numbers are listed for each size enclosure). Please note that side cladding is required to achieve IP66.

3 **Select other additional components.**
Choose from the range listed in the selected enclosure column in the ordering guides.

4 **If additional information is required see catalogue pages** or contact your local B&R sales representative to discuss your requirements.

Field FC

Accessories to suit Field Enclosures

Side Cladding

Vented side panels (metalware only). Fan and filters (see page 114 for full range) are required and can be purchased seperately.

Part Number*	Description	Material	To suit enclosure (mm) Height	Depth
FCCP1306▲	Flush with no ventilation	Zinc coated steel	1375	620
FCCP1606▲			1675	620
FCCP1906▲			1975	620
FCCP2206▲			2275	620
FCCP1306/S▲		316 stainless steel	1375	620
FCCP1606/S▲			1675	620
FCCP1906/S▲			1975	620
FCCP2206/S▲			2275	620
FCCP1306/A▲		Aluminium	1375	620
FCCP1606/A▲			1675	620
FCCP1906/A▲			1975	620
FCCP2206/A▲			2275	620
FCCP1306V▲	Vented with vent hood	Zinc coated steel	1375	620
FCCP1606V▲			1675	620
FCCP1906V▲			1975	620
FCCP2206V▲			2275	620
FCCP1306V/S▲		316 stainless steel	1375	620
FCCP1606V/S▲			1675	620
FCCP1906V/S▲			1975	620
FCCP2206V/S▲			2275	620
FCCP1306V/A▲		Aluminium	1375	620
FCCP1606V/A▲			1675	620
FCCP1906V/A▲			1975	620
FCCP2206V/A▲			2275	620

* Includes one side only
▲ Available on request

Flush with no ventilation

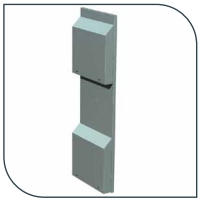

Vented with vent hoods

Ventilated Shelves

Designed for mounting fixed equipment. Available in various options to suit requirements. Rack rails are required for the standard, heavy-duty and telescopic shelves (purchased separately).

Product	Part Number	Description	RU	Dimensions (mm) Height	Width
Standard	FCSF06/19*	19 inch, rated to 50kg	1	440	480
	FCSF06/21*▲	21 inch, rated to 50kg	1	490	480
Heavy duty	FCSH06/19*	19 inch, rated to 160kg	1	440	480
	FCSH06/21*▲	21 inch, rated to 160kg	1	490	480
Telescopic	FCST06/19*	19 inch, rated to 20kg	1	440	480

* Rack rail required
▲ Available on request

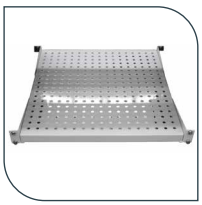

FCSF –Standard shelf

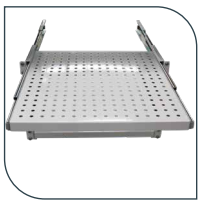

FCST – Telescopic shelf

Baying Kits

Are a method of joining 19" cabinets together. Side cladding must be removed before baying cabinets together.

Part Number	Material	To suit enclosures (mm) Height	Depth
FCBK1306▲	Zinc coated steel	1375	620
FCBK1606▲		1675	620
FCBK1906▲		1975	620
FCBK2206▲		2275	620
FCBK1306/S▲	316 stainless steel	1375	620
FCBK1606/S▲		1675	620
FCBK1906/S▲		1975	620
FCBK2206/S▲		2275	620

▲Available on request

Rails and Brackets

Product	Part Number	Description	Height (mm)	To suit enclosure height (mm)
19" & 21" rail (set of 4)	FCRU15	15RU	670	Partial height rail
	FCRU24	24RU	1081	1375
	FCRU31	31RU	1381	1675
	FCRU37	37RU	1681	1975
	FCRU44	44RU	1981	2275

General Accessories

Product	Part Number	Description	RU
15-way backmount frame	FCCD15/19	19 inch	3
19-pole load centre	FCLC19/19	19 inch	5
Light kit	FCLK	3W LED c/w power supply and switch	1
Door limit switch (alarm)	FCDS	10A, 250V AC	1
Thermostat	FCTHERM	10ºC to +60ºC	–
Gland Plate	FCGA0706▲	3mm aluminium	–
Plan holder	FCPLN07▲	A3	–

▲Available on request

FCCD – Backmount frame

FCTHERM – Thermostat

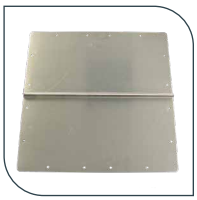

FCGA0706 – 3mm aluminium gland plate

FCLK – Light kit complete with switch

FCPLN07 – A3 Plan holder

Queensland ITS Enclosure

Intelligent Transport Systems Enclosures

T33 Smoke Blue

- IP56 rating
- Tested for up to 500W heat load with thermostatically controlled high-flow fan ventilation, maintaining ≤6°C ΔT
- Configurable for 19” and 21” equipment
- 19” rack vertical rails with cable management, adjustable to 21”
- Extensively third-party tested in Australia
- In-house factory acceptance testing
- Australian designed and made
- Designed for harsh Australian environments and to minimise vandalism
- Configured to meet QLD MRTS226 Telecommunication Field Cabinet requirements

FEQ180906/A

Construction

- Manufactured from 2mm 5052 H32 marine grade aluminium
- Powdercoated for corrosion resistance
- Four-sided sloped sun canopy for rainwater runoff
- Concealed lifting eyebolts
- Removable, internally secured sun canopy/rainhood
- Hinged front and rear doors with 3-point locking bars
- Hinged side panels with internal 3-point locking
- 316 stainless steel lockable swing handles with half Euro profile locking cylinder
- Door and side panel stiffeners
- Door stays on all doors, providing 110° opening
- Stainless steel hinges
- 100mm high, 3mm stainless steel mounting base
- Two-part gland plates for easy cable installation and glanding

Comes standard with

- Thermostatically controlled high-flow ventilation fans
- Ventilation filters
- Fully wired 5RU rack-mounted load centre
- Power distribution unit (PDU) with two 6-way 10A power rails for connection of rack-mounted equipment
- Fixed equipment shelf
- Telescopic equipment shelf
- Micro-switch controlled 5W LED enclosure lights, front and rear
- Document holder
- Two keys supplied with door locks

Metered option – FEQ180906/A/M

Lockable Supply Authority metering section / Meter Panel R3

FEQ180906/A/M

PRODUCT APPROVAL CERTIFICATE
ITS AND ELECTRICAL EQUIPMENT
CERTIFICATE No: 22-34

ORDERING GUIDE

	External Dimensions (mm)				
Part Number	Height (A)	Width (B)	Depth (C)	RU	Description
FEQ180906/A	1850	900	620	31	Standard ITS Cabinet
FEQ180906/A/M	1850	900	620	31	Metered ITS Cabinet

TECHNICAL DRAWINGS

UNMETERED

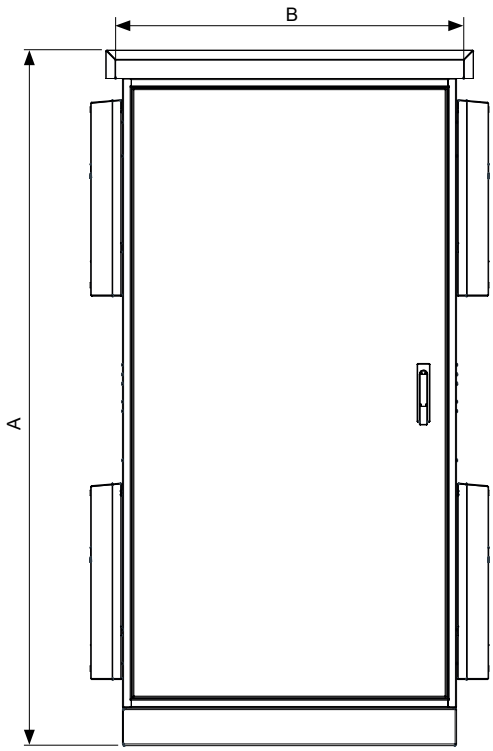

Front View

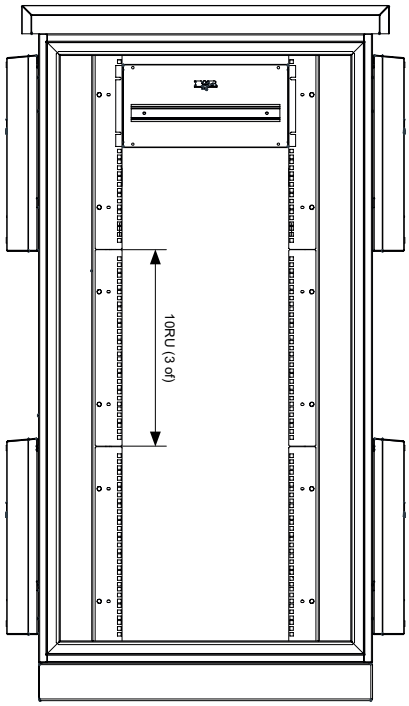

Front View
Door Removed

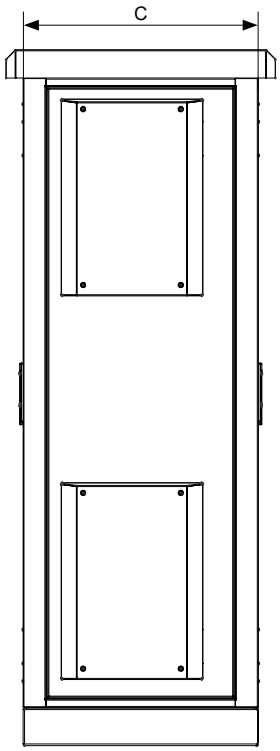

Side View

METERED

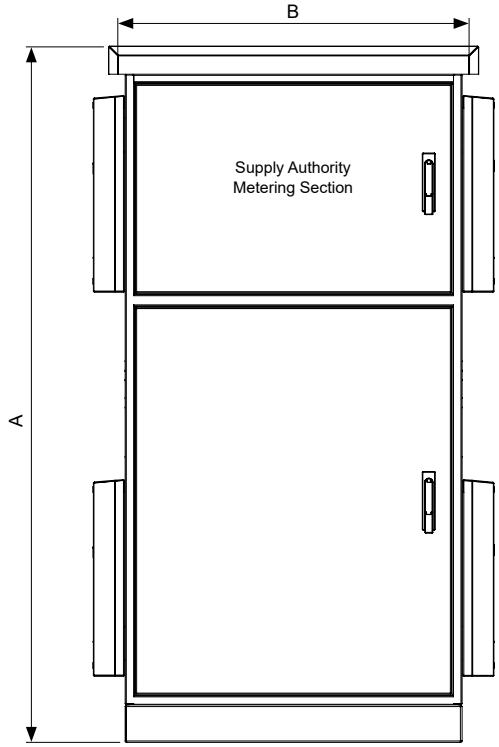

Front View

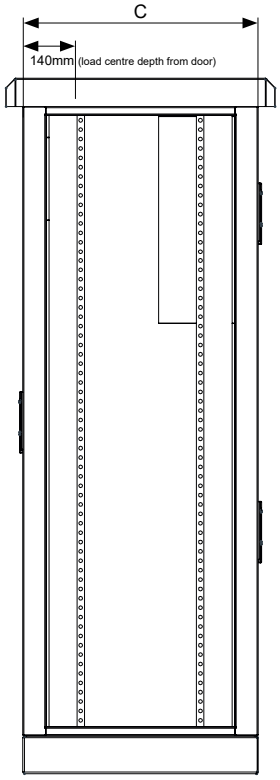

Side View
Panel Removed

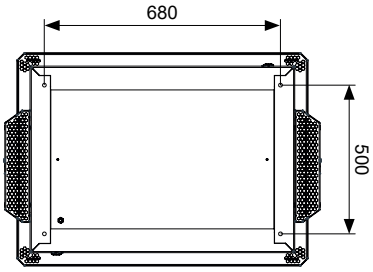

Bottom View

Keeping Your Equipment Cool

Important considerations

Keeping internal equipment operating at optimal temperatures can be difficult to manage. Here are some simple guidelines when keeping installed equipment cool.

Operating temperature of internal equipment

Some equipment is relatively tolerant of high or low temperatures and does not need close consideration, however there are pieces of equipment that do, such as batteries and electronics. The first point of call is to understand the equipment requirements and their function. For example, industrially hardened electronics can be used in cases where high temperatures are always expected. Where batteries are used high temperatures can seriously degrade their performance. Occasional short term heating effects may not be too detrimental to the equipment and so the average effect is important.

Internal heat sources

Electronics or control equipment often draw some current and therefore do generate heat which goes to heating the internals of an enclosure. Depending on the dissipated wattage of these devices the heat within the enclosure could become significant. Heat inside an enclosure also tends to rise to the top resulting in a higher temperature at the top as opposed to the bottom of the enclosure. For this reason, sometimes it is prudent to place more sensitive equipment at the bottom of the enclosure. The temperature difference between the top and bottom of an enclosure could vary by 10-60% as outlined in AS 60890-2009. It is importantly to also consider high current carry cables as they will also generate heat.

Partitions inside an enclosure

For any enclosure, the top surface is the most important to allow the dissipation of internal heat. If an enclosure has an internal partition, heat build-up below the partition can cause excessive heating. Caution needs to be exercised when planning an internal partition. If a partition is unavoidable then try to ensure that the partition has good ventilation to allow for the most effective flow of air. If one is segregating mains power from data circuits, then the maximum size of this ventilation opening should be 12mm (IP23 Wiring Rules, work to 11mm to be sure).

Climatic Conditions

Temperature

Ambient temperature plays a major role in understanding how the internal temperature of an enclosure will operate. Unless there is some active means such as air-conditioners, the internal temperature of an enclosure cannot be less than the ambient.

For example, if an enclosure is installed in Cooper-Pedy then one can expect relatively high internal temperatures on the hottest days of the year, which sometimes can be in excess of 50ºC. Ambient temperature is also cyclic as night and day cycles and it is true that the internal temperature of an enclosure may only reach a high temperature for a short period of time which may not cause any damage to some types of equipment.

Solar Irradiation

The heating effect of the sun, varies dramatically depending on a number of conditions. The latitude and altitude of the application can have a strong bearing on the internal temperature of an enclosure. Conditions such as wind,
clouds, rain and air pollution can also have an effect. It is often difficult to allow for these effects due to the uncertainty of variables however the use of sunshades can simplify these considerations.

Wind

Wind is one of those parameters that is often ignored however it does have a bearing on the average temperatures one could experience inside an enclosure. For example, if one lives in a windy, coastal environment, the wind could play a significant role in keeping internal temperatures down. The enclosure location is therefore always a key consideration.

Colour of an enclosure

The colour of an enclosure plays a significant role on the internal temperature of an enclosure. For example, a black enclosure will absorb more heat from the sun than an enclosure that is white. Therefore choosing a light colour helps to minimise internal temperature rise.

Position of an enclosure

The position of an enclosure will also have a large effect on the internal temperature. For example, an indoor enclosure will not experience solar irradiation so many heating effects of solar irradiation are minimal. However, outdoors both a solar and internal heat source should be considered. An enclosure effectively dissipates its internal heat through the surface area of the enclosure. Therefore if an enclosure is mounted against a wall this effectively removes that surface from the cooling equation. Positioning of an enclosure needs to be carefully considered.

DEK Series

Indoor Roof Mount Air Conditioners

RAL7035

IP 2X

- Designed for indoor applications.
- Suitable for use where the internal temperature of the cabinet is required to be lower than the ambient temperature.
- Ozone friendly R134a or R407C.
- Manufactured from mild steel
- Powdercoated Light Grey RAL7035

Comes standard with:
- All mounting hardware
- Electronic controller (TX-C16000259)

ORDERING GUIDE

Part Number	Supply (V)	Cooling Capacity (W)*	External Dimensions (mm) Height	Width	Depth	Running Current (A)	Inrush Current (A)	Refrigerant F134a	Noise Level**	Weight (kg)
TX-DEK04BT0B ^	230	410/240	260	481	259	1.5	4	0.17	60	18.0
TX-DEK08BT0B	230	820/680	339	600	341	2.9	12	0.31	62	23.0
TX-DEK12BT0B	230	1150/900	415	572	401	3.2	11	0.63	65	40.0
TX-DEK15BT0B	230	1550/1200	415	572	401	4.5	18	0.54	65	44.0
TX-DEK20BT0B▲	230	2050/1560	415	572	401	6.0	24	0.55	65	50.0
TX-DEK30BT0B▲	230	2900/2250	496	784	492	8.2	38	1.26	75	80.0
TX-DEK40BT0B▲	230	3850/2870	496	784	492	9.0	38	1.80	75	83.0
TX-DEK20LT0B▲	400	2050/1560	415	572	401	1.9	10	0.55	65	50.0
TX-DEK30LT0B▲	400	2900/2250	496	784	492	2.5	16	1.26	75	80.0
TX-DEK40LT0B▲	400	3850/2870	496	784	492	3.4	17	1.80	75	83.0

▲ Available on request.

* Wattage cooling capacity while maintaining the internal temperature at 35°C according to EN14511. xxx/--- is the wattage removed while the external ambient is 35°C (A35A35). ---/yyy is the wattage removed while the external ambient is 50°C (A35A50).

** Noise level is determined at 1m from air conditioner in dB(A)

^ Available in RAL7032 - while stocks last, TX-DEK04BT0A

Other voltage supply versions are available on request. Contact your local B&R sales representative for more information.

ACCESSORIES

Description	Part Number	Pack Qty	TX-DEK04BT0A	TX-DEK08BT0A	TX-DEK12BT0A	TX-DEK15BT0A	TX-DEK20BT0A	TX-DEK30BT0A	TX-DEK40BT0A	TX-DEK20LT0A	TX-DEK30LT0A	TX-DEK40LT0A
Metal filters	TX-C15000172	1	•									
	TX-C15000174	1		•								
	TX-AADFM12	1			•	•	•			•		
	TX-AADFM30	1						•	•		•	•
Cloth filters	TX-C15000171	5	•									
	TX-C15000173	5		•								
	TX-AADFP12	5			•	•	•			•		
	TX-AADFP30	5						•	•		•	•

NOX Series

Indoor/Outdoor Wall Mounted Air Conditioners

RAL7035 | Stl | IP 55 Internal | IP 34 External

- Designed for tough Australian conditions and humidity control.
- Suitable for use on electrical enclosures in indoor or outdoor applications.
- Enclosure door or wall mountable
- Ozone compliant R134a refrigerant.
- External ambient side operating temperature from 0°C to 55°C.
- Adjustable cabinet temperature 20°C to 45°C (default set to 35°C).
- Eco mode feature on the entire range to optimise electricity use under low working load conditions.
- Tough industrial powder coated light grey RAL7035 (stainless steel available on special request)

Comes Standard with:

- Electronic display on a 5m lead for remote installation within cabinet or on cabinet door (indoor only).
- Integrated Modbus interface.
- Includes QR code for up-to-date web-based manuals, installation and cutout drawings

ORDERING GUIDE

Part Number	Supply (VAC)	Cooling Capacity (W)[1]*	Environment	External Dimensions (mm) Height	Width	Depth	Running Current (A)	Inrush Current (A)	Refrid F134a (kg)	Noise Level (dBA)	Weight (kg)
TX-NXT04BE0B	230	380/240	Indoor Only	460	280	200	1.5	8.6	0.16	60	17
TX-NOX06BE4B	230	720/555	Indoor/Outdoor	640	316	240	2.3	10.9	0.26	65	24
TX-NOX08BE4B	230	880/705	Indoor/Outdoor	640	316	240	2.4	12.9	0.28	65	25
TX-NOX10BE4B	230	1000/760	Indoor/Outdoor	783	348	220	3.0	13.0	0.28	65	27
TX-NOX12BE4B	230	1250/930	Indoor/Outdoor	1000	400	250	3.2	17.1	0.38	65	39
TX-NOX16BE4B	230	1600/1100	Indoor/Outdoor	1000	400	250	3.0	16.0	0.46	65	41
TX-NOX20BE4B	230	2000/1500	Indoor/Outdoor	1000	400	250	4.0	21.0	0.58	77	42
TX-NOX20HE4B	400 3ph	2000/1500	Indoor/Outdoor	1000	400	250	1.6	12.0	0.58	77	44
TX-NOX30BE4B	230	3000/2210	Indoor/Outdoor	1270	500	336	5.2	35.0	0.84	70	84
TX-NOX30HE4B	400 3ph	3000/2210	Indoor/Outdoor	1270	500	336	2.4	20.0	0.84	70	85
TX-NOX40BE4B	230	3850/2650	Indoor/Outdoor	1270	500	336	7.0	37.0	1.14	70	88
TX-NOX40HE4B	400 3ph	3850/2650	Indoor/Outdoor	1270	500	336	3.1	16.0	1.14	70	89
TX-NOX60HE4B	400 3ph	5400/4200	Indoor/Outdoor	1600	500	400	3.0	32.0	1.80	72	104
TX-EMO80MMEB	400 3ph	7600/5700	Indoor/Outdoor	2000	600	387	5.9	30.7	2.80	75	160
TX-EMOA0MMEB	400 3ph	9400/7000	Indoor/Outdoor	2000	800	387	8.1	30.7	2.30	77	180

* xxx/--- is the amount of heat (in watts) removed while maintaining an internal temperature of 35°C, with an external ambient temperature of 35°C. This corresponds to the A35A35 test condition defined in DIN 14511.

---/yyy is the amount of heat (in watts) removed while maintaining an internal temperature of 35°C, with an external ambient temperature of 50°C. This corresponds to the A35A50 test condition under DIN 14511.s

TX-NOX06HE4B

TX-NOX30HE4B

TX-NOX60HE4B

ACCESSORIES

Part Number	Description	TX-NXT04BE0B	TX-NOX06BE4B	TX-NOX08BE4B	TX-NOX10BE4B	TX-NOX12BE4B	TX-NOX16BE4B	TX-NOX20BE4B	TX-NOX20HE4B	TX-NOX30BE4B	TX-NOX30HE4B	TX-NOX40BE4B	TX-NOX40HE4B	TX-NOX60HE4B	TX-EMO80MMEA	TX-EMOA0MMEA
TX-C15W0013	Filter Material	•														
TX-C15W00140	NEN-type filter and support frame[1]		•	•												
TX-C15W00141					•											
TX-C15W00142						•	•	•	•							
TX-C15W00143										•	•	•	•			
TX-C15W00144														•		
TX-C15007968	NEN-type replacement filter material[2]		•	•												
TX-C15007972					•											
TX-C15007973						•	•	•	•							
TX-C15007974										•	•	•	•			
TX-C15007975														•		
TX-C15000188	PU foam filter														•	•
TX-C15000189	Aluminium mesh air filters														•	•
TX-C16003230	5-metre-long sequence cable[3]		•	•	•	•	•	•	•	•	•	•	•	•		

Notes:
1. The air conditioners are engineered for low maintenance and are supplied without filters for the external air intake. However, in environments with high levels of oily aerosols or airborne particulates, it is recommended to use optional filters. These filters, made from polypropylene on an aluminium frame, are designed for ease of cleaning and repeated use.

2. The polypropylene filter mounted on an aluminium frame is washable and reusable, allowing for fast and easy cleaning. (Please note: the filter support frame is not included.)

3. For mission-critical applications, the sequence feature enables two air conditioners to operate in parallel. A dedicated cable provides communication between the two NOX air conditioning units. Through the advanced capabilities of the TX i40 controller, the units synchronize with each other to deliver optimal thermal management of the electrical cabinet.

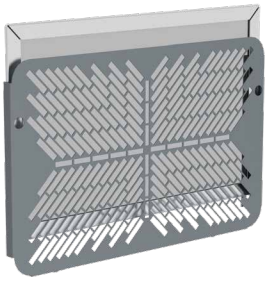

TX-C15W00140

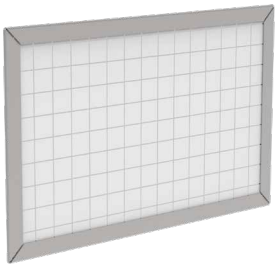

TX-C15007968

TX-C16003230

TX-C15000188

TX-C15000189

BLU-BIT Series

Air-Water Heat Exchangers

RAL7035 Stl IP 55

- Designed for demanding environments.
- Suitable for high dust, high temperature environments where chilled water is available (chillers are NOT sold by B&R Enclosures).
- Cooling capacities from 1kW to 15kW.
- Extremely low maintenance.
- High IP55 protection rating maintains seal between heat exchanger and enclosure.
- Electromechanical thermostat, solenoid valve or level switch is NOT included (sold seperately).
- Manufactured from mild steel.
- Powdercoated Light Grey RAL7035

Comes standard with:

- All fixings required for assembly.

ORDERING GUIDE

Part Number	Supply (V)	Cooling Capacity (W)*	Water Flow Rate (L/hr)	Dimensions (mm) Height	Width	Depth	Running Current (A)	Inrush Current (A)	Noise Level**	Weight (kg)	Mounting
TX-BIT25BX0B	230	2500	500	270	540	400	0.30	2	58	19	Top
TX-BLU10BX0B	230	1000	150	453	311	115	0.17	2	55	12	Side/Door
TX-BLU18BX0B	230	1750	150	901	398	137	0.36	2	58	18	Side/Door
TX-BLU25BX0B	230	2500	500	901	398	137	0.30	2	58	19	Side/Door
TX-BLU35BX0B^	230	3500	500	1148	398	163	0.55	2	64	29	Side/Door
TX-BLU45BX0B^	230	4500	500	1148	398	163	0.70	2	69	30	Side/Door
TX-BLU60BX0B	230	6000	800	1502	450	163	0.70	2	69	40	Side/Door

^ also available in Pebble Grey RAL7032 while stocks last

* Wattage cooling capacity while maintaining the internal temperature at 35°C with 10ºC inlet water temperature according to DIN EN14511 (W10A35).

** Noise level is determined at 1m from air conditioner.

AIR WATER PRESSURE DROP

Air-Water Heat Exchanger	Water Nominal Flow Rate (l/h)	Pressure Drop (bar)
TX-BIT25BX0B	500	0.3
TX-BLU10BX0B	150	0.1
TX-BLU18BX0B	150	0.1
TX-BLU25BX0B	500	0.3
TX-BLU35BX0B^	500	0.2
TX-BLU45BX0B^	500	0.2
TX-BLU60BX0B	800	0.5

Versions which include the electromechanical thermostat, solenoid valve or level switch are available on request or can be purchased seperately.

ACCESSORIES

Part Number	Description	Supply (V)
TX-C16000002	Gas bulb thermostat	230
TX-C15000119	Solenoid valve	230
TX-C16000140	Level actuator	230

MIX Series

Air-Air Heat Exchangers

RAL7035

IP 55

- Designed for applications where the enclosures internal temperature is much higher than the ambient temperature
- Cooling capacity from 22W/K to 80W/K
- IP54 seal between enclosure and heat-exchanger
- IP2X ambient side (indoor use only)
- Heat exchanger can be mounted vertically or horizonally
- Maintenance is minimised by using highly optimised heat exchange surface designed to reduce fouling
- Flush or surface mount
- Other supply options available on request
- Manufactured from mild steel
- Powdercoated Light Grey 7035 (Pebble Grey RAL7032 - while stocks last)

Comes standard with:

- All fixings required for assembly

ORDERING GUIDE

Part Number	Part Number	Supply (V)	Cooling Capacity (W/K)*	Dimensions (mm) Height	Width	Depth	Running Current (A)	Fuse Rating (A)	Noise Level (dBA)	Weight (kg)
RAL7035	**RAL7032**									
TX-MIX22BX0B	TX-MIX22BX0A^	230	22	413	189	149	0.5	1	59	7
TX-MIX36BX0B	—	230	26	771	316	103	0.6	1	67	10
TX-MIX50BX0B	—	230	50	771	316	103	0.6	1	67	10
TX-MIX80BX0B	TX-MIX80BX0A^	230	80	1260	317	148	1	2	75	17

^Available while stocks last

* See selection diagram on page 113 to determine most appropriate sizing / product.

** Noise level is determined at 1m from air conditioner in dB(A)

Other voltage supply versions are available on request. Contact your local B&R sales representative for more information.

ACCESSORIES

Product	Description	Part Number
Electromechanical thermostat	adj. 5 - 60ºC SPDT contacts, 250VAC, @10A	TX-AAWTS10
	adj. 0 - 60ºC SPST (NC) contacts, 250VAC, @10A	TX-AAWTC10

*Air-Air heat exchangers are not fitted with thermostats as standard. A thermostat mounted inside the enclosure is recommended to prevent unit fans running 24/7

SELECTION DIAGRAM

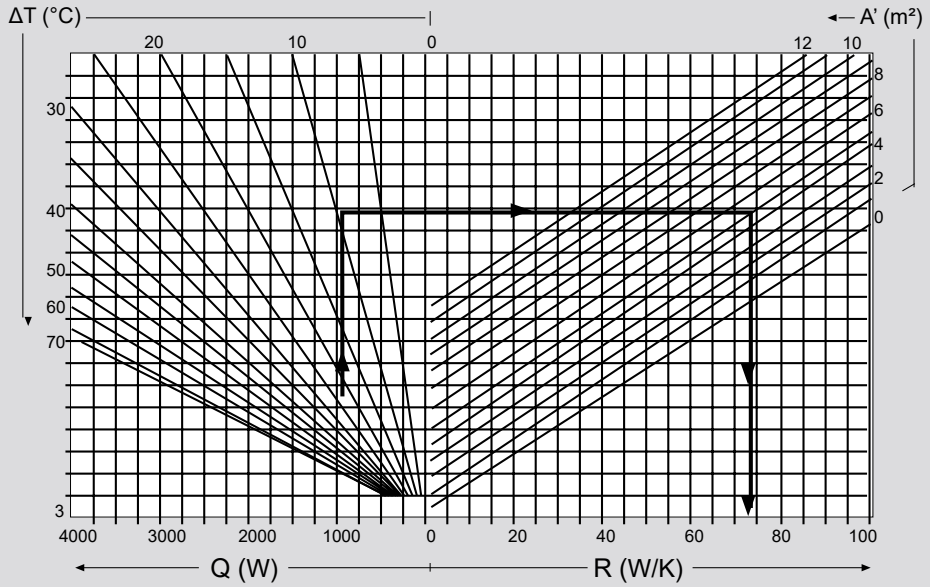

Calculation of Equivalent Surface Area (A)

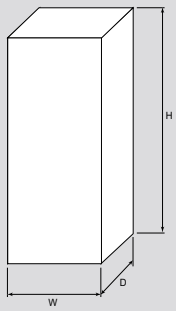

A_{FB} = Area front + Area back
A_S = Area both sides
A_R = Area roof

Total Area = $A_{FB}+A_S+A_R$

Equivalent Area $A' = f_1A_{FB}+f_1A_S+f_2A_R$

Where: -

f_1 = 0.9 if both walls are open
= 0.7 if one wall is covered
= 0.5 if both walls are covered

f_2 = 1.4 if roof is uncovered
= 0.7 if roof is covered

Q = Heat output to dissipate
R = Specific cooling power
ΔT = Temperature differential
A = Cabinet surface area

Example:

Dissipated power	1000W
Temperature differential	10K
Cabinet surface area	5m³

} Unit chosen **MIX80**

FAN and FIL Series

Ventiliating units

RAL7035

IP 54

- Fans and filters with air flow capacities from 57 to 580m³/h.
- Service life exceeds 45,000 hours.
- All fans are bearing supported and rated for 100% duty cycle.
- Operating temperature -10ºC to 55ºC.
- Other supply options available on request.
- Snap-in fastening system on panels between 1.2mm and 2.4mm requires no fastening screws.
- Use fans with the air flow from the exterior of the cabinet to the interior to ensure enclosure pressurisation.
- Utilisation of high-efficiency fabric filters (EU5) results in an elevated IP rating of IP55 although may reduce airflow.
- Easy to change and maintain filter material with accessible screwdriver entry.
- Enhance energy efficiency and extend filter material lifespan by pairing fan with thermostat (TX-AAFT012)
- A fan lead (TX-FANLEAD) is recommended to ensure adherence to IP2x safety standards.

Comes standard with:

- All fixings required for assembly
- Gaskets

ORDERING GUIDE

Part Number			External Dimensions			Cutout		
Colour RAL7035	Power Supply	Air Flow Rate (m³/hr)	Height (mm)	Width (mm)	Depth (mm)	Height (mm)	Width (mm)	Matching Outlet Filter
TX-FAN12BN0B	230VAC 1ph	57	150	150	67	125	125	TX-FIL12XN0B (RAL7035)
TX-FAN12UN0B	24VDC	60						
TX-FAN23BN0B	230VAC 1ph	115	250	250	102	219	219	TX-FIL25XN0B (RAL7035)
TX-FAN23UN0B	24VDC	120						
TX-FAN25BN0B	230VAC 1ph	230	250	250	114			
TX-FAN25UN0B	24VDC	230						
TX-FAN25VN0B	48VDC	230						
TX-FAN35BN0B	230VAC 1ph	520	325	325	153	292	292	TX-FIL35XN0B (RAL7035)

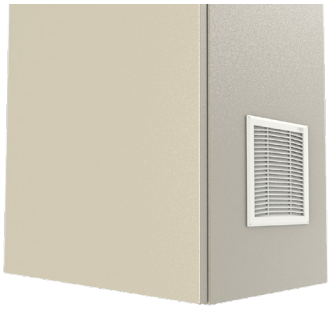

FAN and FIL Series
Ventiliating units

ACCESSORIES

Product	Description	Pack Qty	TX-FAN12BN0B	TX-FAN12UN0B	TX-FAN23BN0B	TX-FAN23UN0B	TX-FAN25BN0B	TX-FAN25UN0B	TX-FAN25VN0B	TX-FAN35BN0B	TX-FIL12XN0B	TX-FIL25XN0B	TX-FIL35XN0B	TX-FIL35XN0B
TX-AAFFH12	Class EU5 Cloth Filter (high efficiency)	10	•	•							•			
TX-AAFFH25		10			•	•	•	•	•			•		
TX-AAFFH35		10								•			•	•
TX-AAFFN12	Class EU4 Cloth Filter	10	•	•							•			
TX-AAFFN25		10			•	•	•	•	•			•		
TX-AAFFN35		10								•			•	•
TX-FANLEAD	IP2x Compliance Connection Lead	1	•	•	•	•	•	•	•	•				

SELECTION DIAGRAM

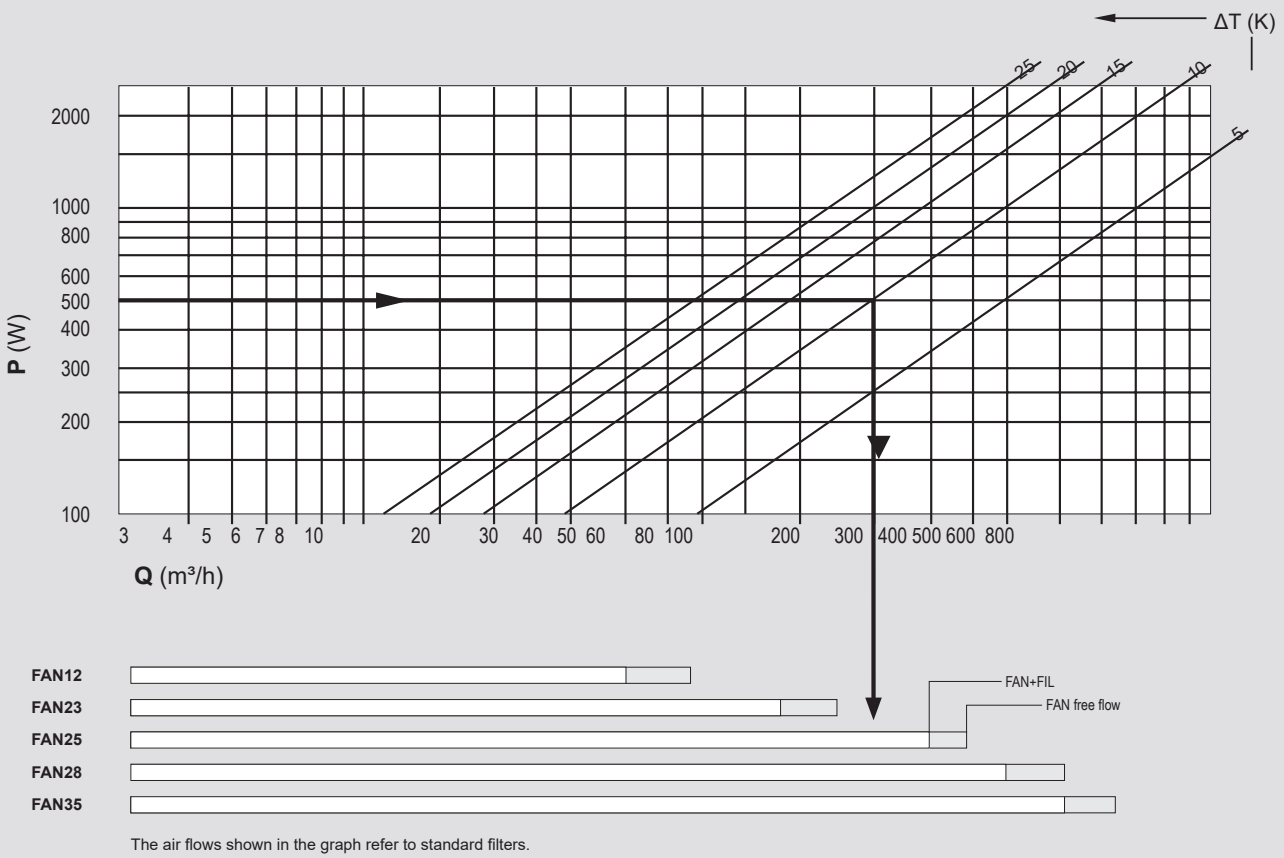

The air flows shown in the graph refer to standard filters.

Q = Air flow
P = Power dissipated in the cabinet
ΔT = Temperature differential

Example:

Dissipated power	500W	Unit chosen FAN25
Temperature differential	10K	
Necessary flow rate	160m³/hr	

DLK Series
Ventilating Towers

RAL7035 Stl IP 44

- Designed to provide the air capacity to allow significant cooling using external air.
- Air flow capacities from 600 to 4000m³/h.
- All fans are bearing supported and rated for 100% duty cycle.
- Service life exceeds 45,000 hours of service.
- Over current protection built into motor.
- Operating temperature -20ºC to 60ºC.
- Other supply options available on request.
- Powdercoated Light Grey RAL7035 (or Powdercoated Pebble Grey RAL7032 available on request)

Comes standard with:
- All fixings required for assembly

ORDERING GUIDE

Part Number	Power Supply (V)	Air Flow Rate** (m^3/hr)	External Dimensions (mm) Height	Width	Depth	Power Draw (W)	Max Current (A)	Matching Filter Grill
TX-DLK19BX0B	230	600/500	122	375	375	106	0.4	TX-FIL35XN0B
TX-DLK22BX0B	230	1050/700	122	375	375	168	0.65	
TX-DLK48BX0B	230	4000/3340	272	637	637	410	1.8	

** xxx/yyy – “xxx” denotes air flow rate in free air and “yyy” denotes air flow rate with matching filter grill.

Other voltage supply versions are available on request. Contact your local B&R sales representative for more information.

ACCESSORIES

Part Number	Description	Pack Qty	To suit products
TX-AAFFH35	Class EU5 cloth filter (high efficiency)	10	TX-FIL35XN0B
TX-AAFFN35	Class EU4 cloth filter	10	TX-FIL35XN0B
IPVH35/LG	Vent hood		TX-FIL35XN0B

NOTE: Air flow will decrease when using filter.

SELECTION DIAGRAM

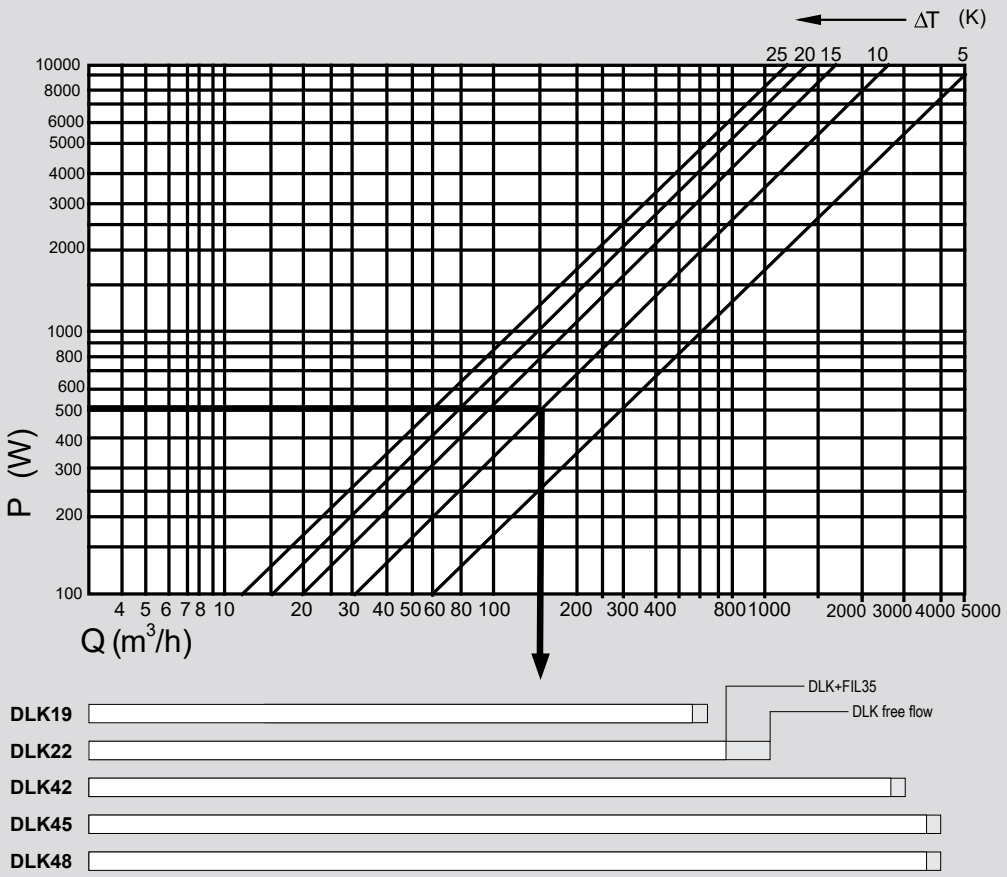

Q = Air flow rate
P = Power dissapated in the cabinet
ΔT = Temperature differential

Example:

Dissipated power	500W	
Temperature differential	10K	
Necessary flow rate	160m³/hr	Unit chosen **DLK19**

Anti-Condensation Heaters

B&R's WID Series of anti-condensation heaters prevents faults or corrosion due to excessively low temperatures or high humidity levels inside the enclosure.

Condensation is affected by temperature, humidity and air pressure. Therefore to control condensation inside an enclosure, protecting electrical equipment, we can try and affect any of these three parameters. Extracting humidity is in-itself relatively difficult. Equalising air pressure helps but does not necessarily prevent condensation. Increasing internal temperature can allow the dew point never to be reached and is a recommended solution.

However AS/NZS 3000:2018 has introduced consideration for the implementation of breathing/pressure equalisation valves. B&R also offer breathers that are IP66 rated. These breathers allow pressure equalisation while continuing to maintain the enclosures IP rating. A heater together with a humidistat controller remains the recommended control method.

Anti-condensation heaters are required to prevent faults or corrosion due to excessively low temperatures or high humidity levels inside the cabinet.

These conditions can occur when the ambient temperature is low and the equipment inside the cabinet is not powered or does not dissipate sufficient heat to keep the internal temperature above a minimum threshold. Outdoor cabinets are almost always found in these conditions.

Enclosures

Enclosure Volume	Heater	
<1m³	TX-WID05ZX0P	50W
>1m³ but <2m³	TX-WID10BL0C	100W
>2m³ but <3m³	TX-WID15BL0C	150W

Controllers

Part Number	Description
TX-AAWHS10	Humidistat
TX-AAWTC10	Thermostat

Breathers

Part Number	Description
IPBRTH	Plastic Breather
IPBRTH/S	Stainless Steel Breather

WID Series

Anti-Condensation Heaters

- Designed to heat an enclosure without condensation being produced.
- Suitable for use in enclosures where low temperature or high humidity may cause condensation to form in the enclosure, damaging equipment.
- All heaters in this range will not overheat due to self-limiting from positive temperature co-efficient.
- Heating power ranges from 10W – 550W.
- Fan heaters have an expected lifetime of 50,000 hours.
- Available in either 110-250 V AC/DC or 230 V 50/60Hz.
- Thermostat or humidistat optional.
- All fans are bearing supported and rated for 100% duty cycle.
- Operating temperature 60ºC.
- IP20 protection rating.
- All heaters in this range are DIN rail mountable.
- Other supply options available on request.
- Conformity, Approvals:
  UL 94 V-0 (non-metal parts only)
- Manufactured from die cast aluminium / plastic.

Comes standard with:
- All fixings required for assembly to DIN rail.

ORDERING GUIDE

Part Number	Description	Supply (V)	Heating Capacity (W)*	External Dimensions (mm) Height	Width	Depth
TX-WID05ZX0X	Standard heater, aluminium casing	110-250 AC/DC	45	109	70	50
TX-WID10ZX0X		110-250 AC/DC	100	184	70	50
TX-WID15ZX0X		110-250 AC/DC	150	264	70	50
TX-WID01ZX0P	Standard heater with plastic cover	110-250 AC/DC	10	99	38	79
TX-WID02ZX0P		110-250 AC/DC	20	99	38	79
TX-WID03ZX0P		110-250 AC/DC	30	99	38	79
TX-WID05ZX0P		110-250 AC/DC	50	110	60	90
TX-WID10ZX0P		110-250 AC/DC	100	150	60	90
TX-WID15ZX0P		110-250 AC/DC	150	150	60	90
TX-WID10BL0C	Fan Forced compact heater, plastic casing	230 AC 1ph	100	112	80	47
TX-WID15BL0C		230 AC 1ph	150	112	80	47
TX-WID20BL0C		230 AC 1ph	200	151	119	47
TX-WID30BL0C		230 AC 1ph	300	151	119	47
TX-WID40BL0C		230 AC 1ph	400	151	119	47
TX-WID35BL0T	Fan forced with thermostat and plastic casing	230 AC 1ph	350	165	100	128

* Heating capacity at ambient of 20ºC

SELECTION DIAGRAM

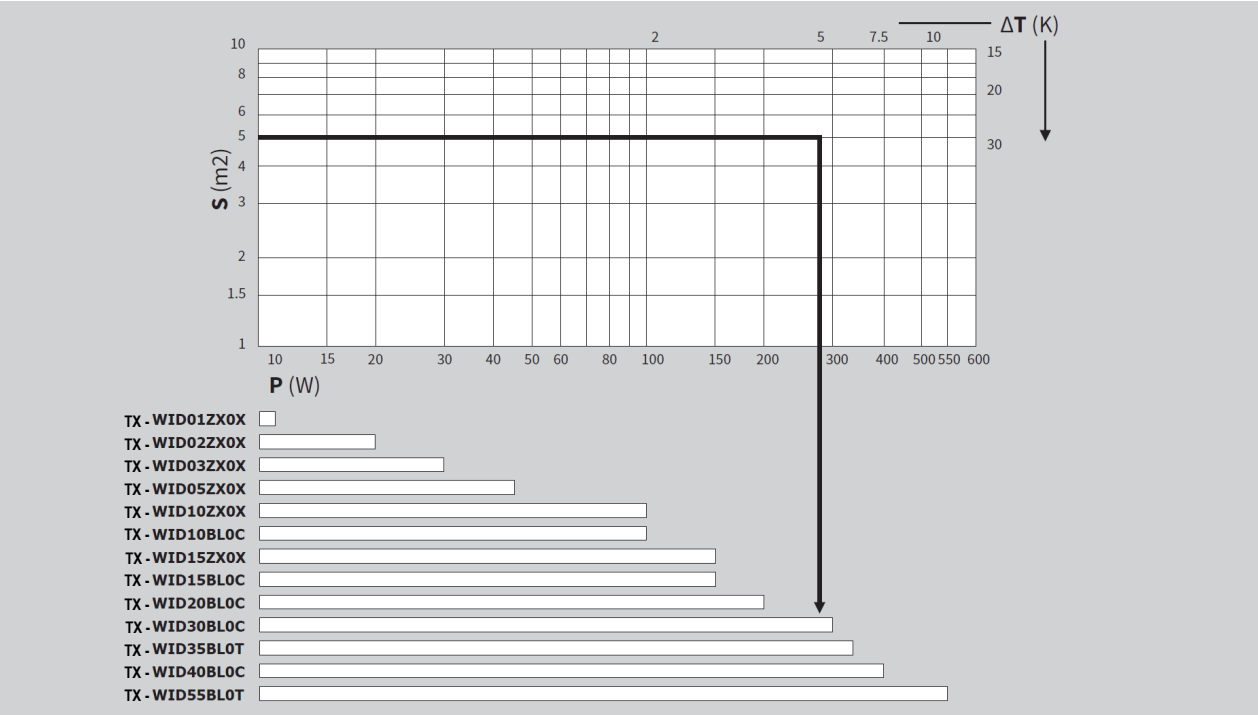

P = Heating power
S = Cabinet surface area
ΔT = Temperature differential

Example:

Cabinet surface area	5 m²	Unit chosen
Temperature differential	10 K	**WID30BL0C or**
Heating power	280W	**WID35BL0T**

05 - 15ZX0X

05 - 15ZX0P

BL0C

BL0T

Accessories

General accessories for climate control products

Thermostats

Extremely compact thermostat with quick snap-in installation and a wide adjustment range. It has either a normally closed (NC), normally open (NO) or a single pole single throw (SPST) contacts. Thermostats are mainly used to control the fans, heat exchangers or to indicate a maximum temperature signal as the contacts are potential free.

Part Number	Specification	Pack Qty
TX-AAWTC10	Bi-metal, Adjustable 0-60°C Contact: SP NC 10A/250VAC	1
TX-AAWTS10	Bi-metal, Adjustable 0-60°C Contact: SPDT 10A/250VAC	1
TX-AAFTO12	Bi-metal, Adjustable 0-60°C Contact: SP NO 10A/250VAC	1

TX-AAWTC10

TX-AAWTS10

TX-AAFTO12

Dual Thermostats

Dual element thermostats in a single housing having the same benefits as the single element versions but allow the control of two items within the enclosure. For example one thermostat with contact normally closed for the regulation of heating appliances and one thermostat with contact normally open for the regulation of fans with filters or heat exchangers.

Part Number	Specification	Pack Qty
TX-C16000385	TWIN Bi-metal, Adjustable 0-60°C Contact: SP NC/NC 10A/250VAC	1
TX-C16000386†	TWIN Bi-metal, Adjustable 0-60°C Contact: SP NO/NO 10A/250VAC	1
TX-C16000387†	TWIN Bi-metal, Adjustable -10ºC-80°C Contact: SP NO/NO 10A/250VAC	1

† While Stocks Last

TX-C16000385

Gas Bulb Temperature Control Thermostat

Gas bulb temperature control thermostat, adjustable range between 20° and 46° C.

Part Number	Specification	Pack Qty
TX-C16000002	Gas bulb, Adjustable 20ºC-46ºC Contact: 2A / 250VAC 6.3 x 0.8mm FASTON connections 44x38x34mm	1

TX-C16000002

Accessories

General accessories for climate control products

Small Plastic DIN Rail Accessory

For installing thermostats or other small devices inside enclosures. It is easy to apply with the anti-ageing adhesive strip which can support a continuous load up to 500 g. It can also be screw mounted to a panel.

Part Number	Specification	Pack Qty
TX-AAWFT10	Thermostats and humidistat TX-AAWHS10, TX-AAWTC10, TX-AAWTS10, TX-C16000385, TX-C16000386, TX-C16000387	

Class EU5 Cloth Filters

The highly efficient class EU5 cloth filters are used in environments where there is very fine dust achieving up to 97% filtration. By using this kind of filter an IP54 protection level can be achieved. High efficiency cloth filters will restrict air flow rate and therefore fans should be over sized for the application. To maintain a high performance of these types of ventilating units it is necessary to periodically check how dirty the cloth filter is and, if necessary, change it with a new one.

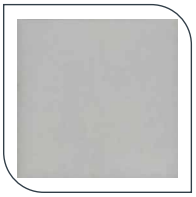

Part Number	Specification	Pack Qty
TX-AAFFH12	FAN12 & FIL12	10
TX-AAFFH25	FAN23-25-28 & FIL25	10
TX-AAFFH35	FAN35 & FIL35	10

Class EU4 Cloth Filters

These are standard class EU4 cloth filters for FAN units achieving up to 91% filtration. By using this kind of filter an IP44 protection level can be achieved. To maintain a high performance of these types of ventilating units it is necessary to periodically check how dirty the cloth filter is and, if necessary, change it with a new one. These filters are made in self-extinguishing synthetic fibres with a very close mesh and a progressive filtering strength. Using these filters efficiency reaches 91%.

Part Number	Specification	Pack Qty
TX-AAFFN12	FAN12 & FIL12	10
TX-AAFFN25	FAN23-25-28 & FIL25	10
TX-AAFFN35	FAN35 & FIL35	10

Metal Air Filters

All air conditioners are designed to be highly robust and very low in maintenance however in extreme dusty conditions the cooling units can be fitted with metal air filters to ease maintenance cycles. Compared to the polyurethane foam filters, metal filters are not as aggressive but are easier to clean and maintain. Due to their all aluminium construction they are very robust and can be cleaned with most degreasing detergents again and again.

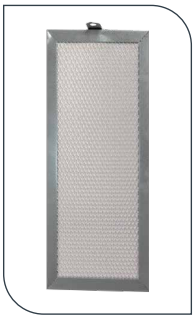

Part Number	Used with	Pack Qty
TX-AADFM12	DEK12-15-20	1
TX-AAEFM04	EGO04	1
TX-AAEFM06	EGO06	1
TX-AAEFM10	EGO08-10	1
TX-C15000164	EGO12-16-20	1
TX-C15000172	DEK04	1
TX-C15000174	DEK08	1

Accessories

General accessories for climate control products

Polyurethane Air Filters

All airconditioners are designed to be highly robust and very low in maintenance however if the ambient air is highly contaminated (containing particles or aerosols) a filter can be installed behind the intake grille in the space left for it. These filters are made from a polyurethane foam which has excellent mechanical and chemical resistance characteristics.

Part Number	Used with	Pack Qty
TX-AADFP12	DEK12-15-20	5
TX-AADFP30	DEK30-40	5
TX-AAEFP04	EGO04	5
TX-AAEFP06	EGO06	5
TX-AAEFP10	EGO08-10	5
TX-C15000163	EGO12-16-20	5
TX-C15000171	DEK04	5
TX-C15000173	DEK08	5

Humidistats

An alternative method for controlling humidity is using a humidistat with a heater. The dew point inside an enclosure is relative to the humidity and temperature difference between the inside and outside of the enclosure. Heating the internal of the enclosure in high humidity applications will reduce condensation.

Part Number	Specification	Pack Qty
TX-AAWHS10	Adjustable 35-95%RH Contact: SPDT 10A/250VAC	1

Electronic Thermostat

The microprocessor based controller is designed to be suitable for refrigerating applications providing easy set point adjustment, alarm outputs and inputs with an external LED display showing internal temperature.

Part Number	Specification	Pack Qty
TX-C16000259	Power supply: 230Vac ±10%, 50/60Hz Inputs: 1 NTC probe Digital input: free voltage contact Relay outputs: Temperature control output 1: SPDT 12A 250Vac, Alarm output 2: SPST 5A 250Vac Operating temperature: 0-60 °C	1

Project Profile

Peninsula ECO Project, Mornington Peninsula Victoria

The Peninusla ECO Project required construction of 15.4km of transfer main and pump station as part of the Southern Monington Peninsular Backlog Sewerage Scheme.

Also known as the Peninsula Early Connection Offer (Peninsula ECO)Transfer System, the system will transfer sewage from Rye, Blairgowrie, Sorrento and Portsea to Boneo Sewage Treatment Plant (STP).

B&R were contracted to supply the enclosures used to provide mechanical protection to above ground air valves and carbon canisters.

The demand to provide sewerage connections to more than 16,000 properties was driven by evidence of waste from failing household septic tanks along the Peninsula. In turn, polluting groundwater, waterways and the environment.

To support the infrastructure, B&R's design solution required high integrity to withstand potential vandalism, adequate ventilation and aesthetics to suit the high visibility location.

> "B&R's ability to provide design advice in the early phases of quoting and flexibility in project delivery provided unsurpassed value to the customer."

After close communication on the specified drawings, B&R's custom design included single, double and four door 3mm marine grade aluminium cabinets. The cabinets were also required to be within SEW "Eucalyptus green" paint requirements for cabinets. Fitted with padlockable swing handles and stainless steel fittings, the design prioritised security and quality.

A particular point of difference in the B&R offer was the capability to design and manufacture using marine grade aluminium. A growing demand for aluminium as a preferred material has seen B&R design standard and custom aluminium cabinets to the likes of Ansaldo, Coffs Harbour, Fremantle Ports and Victoria Roads.

The Peninsula ECO Project specified the use of 3mm marine grade aluminium. The advantages of using aluminium as an alternative to stainless steel or zinc coated steel include improved corrosion resistance in marine atmospheres and low density and excellent thermal conductivity for high exposure environments. The use of aluminium also lends to decreased costs in freight and general installation due to its lighter make-up.

Building on an existing relationship with SEW, whom B&R have previously supplied to, B&R became the preferred supplier over local competitors for the FHDB partnership. With extensive experience in the water utilities market, B&R's ability to not only provide design advice in the early phases of quoting but also provide flexibility in project delivery including trading terms and order delivery – provided unsurpassed value to the client.

The provision for a single, reliable point of contact from B&R who shepherded the project from start to finish enabled a seamless negotation process to fulfill all stakeholder needs.

Overall, the execution of the Peninsula ECO Project was successful with custom cabinets designed to the specification and delivered in accordance with the delivery schedule to the site yard.

BUILT TO PROTECT
ENGINEERED TO PERFORM

1300 ENCLOSURES
1300 362 567

sales@brenclosures.com.au

brenclosures.com.au

AUSTRALIA • NEW ZEALAND • CHINA • GULF

REV: 2026-09-22